INSTRUCTION MANUAL

FOR

MODEL 600B ELECTROMETER

DOCUMENT NUMBER TD K045.0060

RECORD OF REVISIONS

TITLE OF DOCUMENT

INSTRUCTION MANUAL
FOR
MODEL 600B ELECTROMETER

REVISION NUMBER	DATE	DESCRIPTION OF REVISION	REVISED BY
0	02-25-88	ORIGINAL	Jack R. Ruhr

WARRANTY

We warrant each of our products to be free from defects in material and workmanship. Our obligation under this warranty is to repair or replace any instrument or part thereof which, within a year after shipment, proves defective upon examination. We will pay domestic surface freight costs.

To exercise this warranty, call your local field representative or the Cleveland factory, DDD 216-248-0400. You will be given assistance and shipping instructions.

REPAIRS AND RECALIBRATION

Keithley Instruments maintains a complete repair service and standards laboratory in Cleveland, and has an authorized field repair facility in Los Angeles and in all countries outside the United States having Keithley field representatives.

To insure prompt repair or recalibration service, please contact your local field representative or the plant directly before returning the instrument.

Estimates for repairs, normal recalibrations, and calibrations traceable to the National Bureau of Standards are available upon request.

TABLE OF CONTENTS

Section	Page
MODEL 600B SPECIFICATIONS	ii
1. GENERAL DESCRIPTION	1
1-1. General	1
1-2. Features	1
2. OPERATION	3
2-1. Input Connections	3
2-2. Preliminary Procedures	3
2-3. Voltage Measurements	4
2-4. Current Measurements	4
2-5. Resistance Measurements	6
2-6. Charge Measurements	7
2-7. Recorder Outputs	7
2-8. Unity-Gain Output	8
3. CIRCUIT DESCRIPTION	9
3-1. General	9
3-2. Voltmeter Operation	9
3-3. Voltmeter Circuit	9
3-4. Ammeter Operation	10
3-5. Ohmmeter Operation	10
3-6. Coulombmeter Operation	11
SERVICING	12
4-1. General	12
4-2. Servicing Schedule	12
4-3. Parts Replacement	12
4-4. Troubleshooting	12
4-5. Procedures to Guide Troubleshooting	12
5. CALIBRATION	14
5-1. General	14
5-2. Calibration Schedule	14
5-3. Preliminary Procedures	14
5-4. Mechanical Meter Set, Meter Zero and Output Calibration	14
5-5. Meter Tracking Check	14
5-6. Unity Gain Check	15
5-7. Noise Check	15
5-8. Offset Current Check	15
5-9. Drift Check	15
5-10. High-Megohm Resistor Verification	15
5-11. Accuracy Check	16
5-12. Frequency Response Check	16
6. ACCESSORIES	19
6-1. Model 6101A Shielded Test Lead	19
6-2. Model 6101B Gripping Probe	19
6-3. Model 6102A Voltage Divider Probe	19
6-4. Model 6103A Voltage Divider Probe	19
6-5. Model 6104 Test Shield	19
6-6. Model 6105 Resistivity Adapter	20
6-7. Models 2501 and 2503 Static Detector Probes	20
6-8. Model 6107 pH Electrode Adapter	21
6-9. Model 370 Recorder	21
7. REPLACEABLE PARTS	22
7-1. Replaceable Parts List	22
7-2. How to Order Parts	22
Model 600B Replaceable Parts List	22
Batteries	22
Capacitors	22
Connectors	23
Diodes	23
Miscellaneous	23
Resistors	24
Switches and Controls	25
Transistors	26
Schematic Diagram 22808E	27
Repair and Calibration Form	29
* Change Notice	Last Page

* Yellow Change Notice Sheet is included only for instrument modifications affecting the Instruction Manual.

TABLE OF ILLUSTRATIONS AND TABLES

ILLUSTRATIONS

No.	Subject	Page
1.	Model 600B Electrometer	1
2.	Front Panel Controls	2
3.	Rear Panel Controls	2
4.	Error Due to Ammeter Resistance	5
5.	Galvanometric Method Current Measurements	6
6.	Voltmeter-Ammeter Method Resistance Measurements	7
7.	Output Divider Circuits	8
8.	Measuring Potential of High Resistance Source With 0.025% Accuracy	8
9.	Block Diagram of Model 600B as Voltmeter	10
10.	Block Diagram of Model 600B as Picoammeter	11
11.	Block Diagram of Model 600B as Ohmmeter	11
12.	Component Layout Model 600B Chassis	17
13.	Component Layout PC-189	18
14.	Models 6101A and 6102A	19
15.	Model 6101B Gripping Probe	19
16.	Model 6103A Voltage Divider Probe	19
17.	Model 6104 Circuit Diagram	19
18.	Model 6104 Test Shield	20
19.	Model 6105 Resistivity Adapter	20
20.	Model 2501 Static Detector Probe	20
21.	Model 2503 Static Detector Probe	21

TABLES

No.	Subject	Page
1.	Model 600B Specifications	ii
2.	Front Panel Controls	2
3.	Rear Panel Controls	2
4.	Multiplier Switch Positions for Checking Battery Condition	3
5.	Calibration and Troubleshooting Equipment	12
6.	Model 600B Troubleshooting	13
7.	Model 600B Internal Controls	14
8.	Charge Ranges Accuracy Check	16
9.	Abbreviations and Symbols	22
10.	Suggested Manufacturers	26

TABLE 1. Model 600B Specifications.

AS A VOLTMETER:

RANGE: .01 volt full scale to 10 volts in seven 1x and 3x ranges.

ACCURACY: ±2% of full scale on all ranges exclusive of noise and drift.

ZERO DRIFT: Less than 2 millivolts per 24 hours, less than 200 microvolts per °C, after 30-minute warm-up.

INPUT IMPEDANCE: Greater than 10^{14} ohms shunted by 20 picofarads. Input resistance may also be selected in decade steps from 10 to 10^{11} ohms.

AS AN AMMETER:

RANGE: 10^{-13} ampere full scale to 0.3 ampere in twenty-six 1x and 3x ranges.

ACCURACY: ±3% of full scale on 0.3 to 10^{-10} ampere ranges using the smallest available multiplier setting; ±5% of full scale on 3×10^{-11} to 10^{-13} ampere ranges.

METER NOISE: Less than $\pm 10^{-14}$ ampere.

OFFSET CURRENT: Less than 2×10^{-14} ampere.

AS AN OHMMETER:

RANGE: 1000 ohms full scale to 10^{13} ohms in twenty-one linear 1x and 3x ranges.

ACCURACY: ±4% of full scale on 1000 to 10^{8} ohm ranges using the largest available multiplier setting; ±5% of full scale on 3×10^{8} to 10^{13} ohm ranges.

AS A COULOMBMETER:

RANGE: 10^{-12} coulomb full scale to 10^{-6} coulomb in thirteen 1x and 3x ranges.

ACCURACY: ±5% of full scale on all ranges. Drift due to offset current does not exceed 2×10^{-14} coulomb per second.

AS AN AMPLIFIER:

INPUT IMPEDANCE: Greater than 10^{14} ohms shunted by 20 picofarads. Input resistance may also be selected in decade steps from 10 to 10^{11} ohms.

OUTPUTS: Unity-gain output and either voltage or current recorder output.

VOLTAGE RECORDER OUTPUT: ±1 volt for full-scale input. Internal resistance is 910 ohms. Output polarity is opposite input polarity.

Gain: 0.1, 0.33, etc., to 100.

Frequency Response (within 3 db): *

Noise: **

CURRENT RECORDER OUTPUT: ±1 milliampere for full scale input, variable ±5% with 1400-ohm recorders.

UNITY-GAIN OUTPUT: At dc, output is equal to input within 25 ppm, exclusive of noise and drift. Up to 0.1 milliampere may be drawn. Output polarity is the same as input polarity.

GENERAL:

POLARITY: Meter Switch selects left-zero (positive or negative) or center-zero scales. Output polarity is not reversed.

CONNECTORS: Input: Teflon-insulated UHF Type. Outputs: Barrier Strip.

BATTERY CHECK: Condition of all batteries may be checked with front panel controls.

BATTERIES: Four 2N6 (or 246, VS305, NEDA 1602); one RM-1W. 700-hour battery life

DIMENSIONS, WEIGHT: 10-1/4" high x 6-1/2" wide x 6-1/2" deep; net weight, 7-1/4 pounds.

ACCESSORIES SUPPLIED: Mating input connector.

* dc to 20 kHz at a gain of 1, decreasing to 1 kHz at maximum gain. Full output response limited to 1 kHz.

** Less than 10 millivolts rms referred to output.

SECTION 1. GENERAL DESCRIPTION

1-1. GENERAL.

a. The Keithley Model 600B Electrometer is an economical, completely solid-state battery operated instrument which measures a wide range of dc voltage, current, resistance and charge. The Electrometer's input resistance of greater than 10^{14} ohms is the result of extensive instrument development with high input impedance transistors. The Model 600B has all the capabilities of conventional VTVMs, but it can also make many more measurements without circuit loading.

b. The Electrometer has seven voltage ranges from 0.01 volt full scale to 10 volts, twenty-six current ranges from 10^{-13} ampere full scale to 0.3 ampere, twenty-one linear resistance ranges from 1000 ohms full scale to 10^{13} ohms, and thirteen charge ranges from 10^{-12} coulomb full scale to 10^{-6} coulomb.

c. The Model 600B employs matched insulated-gate field-effect transistors followed by a differential transistor amplifier and a complimentary output stage. A large amount of negative feedback is used for stability and accuracy.

1-2. FEATURES.

a. An important feature of the Model 600B is its excellent zero stability which permits accurate measurements with a minimum of adjustment. Zero drift with time is less than 2 mV per day. Zero offset due to temperature change is less than 200 microvolts per °C, after a 30-minute warm-up. This offset, however, can easily be compensated for with the front-panel zero controls.

b. Fast warm up is an inherent characteristic of this Electrometer. It can be used well within 30 minutes of a cold start on the most sensitive range and almost immediately on less sensitive ranges.

c. Low offset current — less than 2×10^{-14} ampere — minimizes zero offset with high source resistances and permits maximum resolution when measuring current and charge.

d. The 700-hour life of the batteries enables usage in long-term experiments without interruptions for replacement. Battery life is maintained even when the 1-milliampere recorder output is used. For further convenience, battery condition is readily checked on the panel meter.

e. Excellent overload protection without degradation of performance is obtained by use of a unique input circuit. The Model 600B Electrometer will withstand overloads up to 500 volts on most ranges without damage and has good recovery.

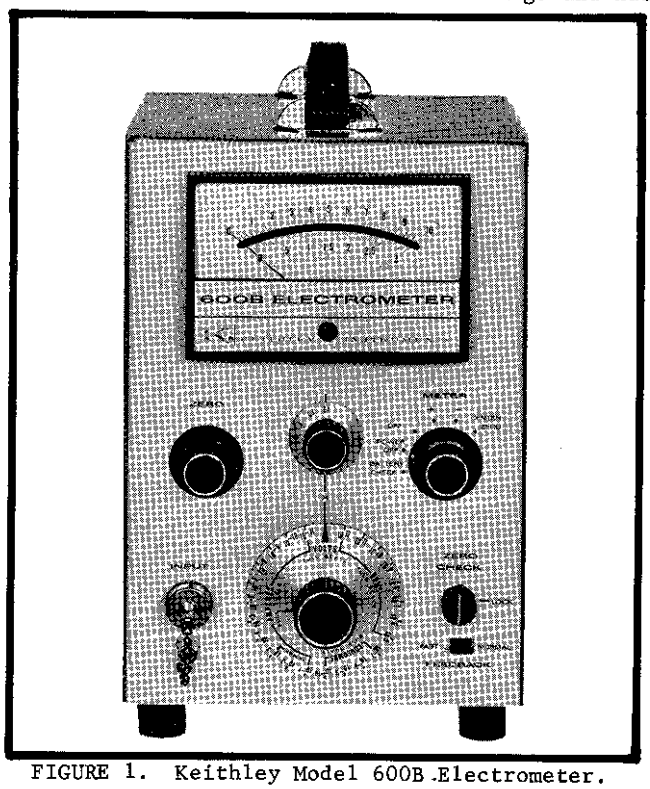

FIGURE 1. Keithley Model 600B Electrometer.

TABLE 2. Model 600B Front Panel Controls and Terminals. (Figure 2).

Control	Functional Description	Paragraph
Range Switch	Selects the mode which is to be measured: voltage, current, resistance or charge.	2-2 thru 2-6
Multiplier Switch	Determines full-scale voltage sensitivity, and can be used to multiply current, resistance and charge ranges on the Range Switch.	2-2 thru 2-6
METER Switch	Checks battery condition; turns instrument off; disconnects meter; selects meter polarity, sets instrument for center zero operation.	2-2 thru 2-7
ZERO Control	Allows precise meter zeroing.	2-2
ZERO CHECK Button	Zeroes meter on any range	2-2 thru 2-6
FEEDBACK Switch	Determines the feedback connections within the instrument.	2-1 thru 2-8
INPUT Receptacle	Connects input to source. Receptacle is a Teflon-insulated UHF connector.	2-1,2-5,2-6
Binding Post	Provides connection to ground.	2-1

TABLE 3. Model 600B Rear Panel Controls and Terminals. (Figure 3)

Control	Functional Description	Paragraph
COARSE ZERO Switch	Extends the zeroing capability of the front panel ZERO Control.	2-2
1 V - 1 MA CAL Control	Varies voltage and current output ±10%.	2-7
Barrier Strip Connector (X1, OHMS GUARD, A, B and GND Terminals)	Connection to voltage/current output, unity-gain output, guard and case ground terminals.	2-4,2-5,2-7 2-8

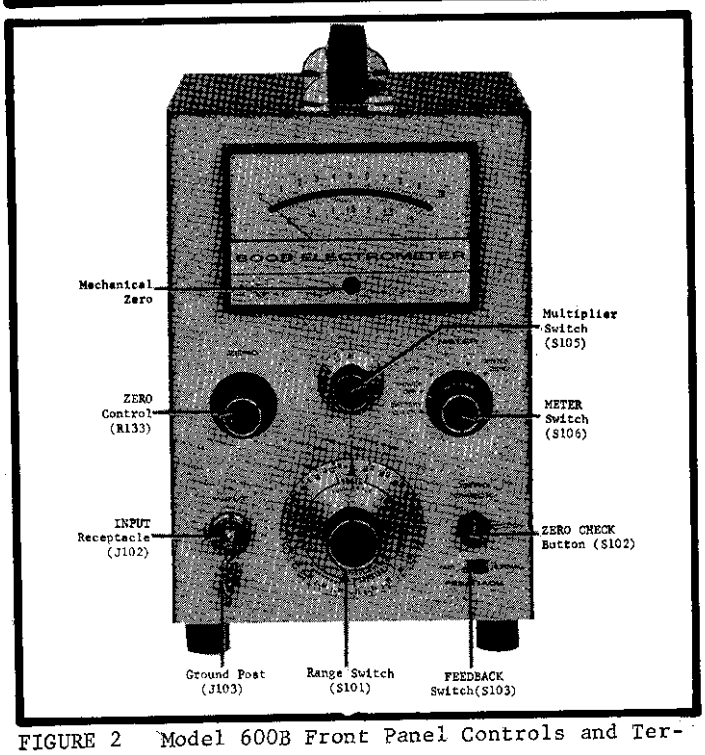

FIGURE 2 Model 600B Front Panel Controls and Terminals.

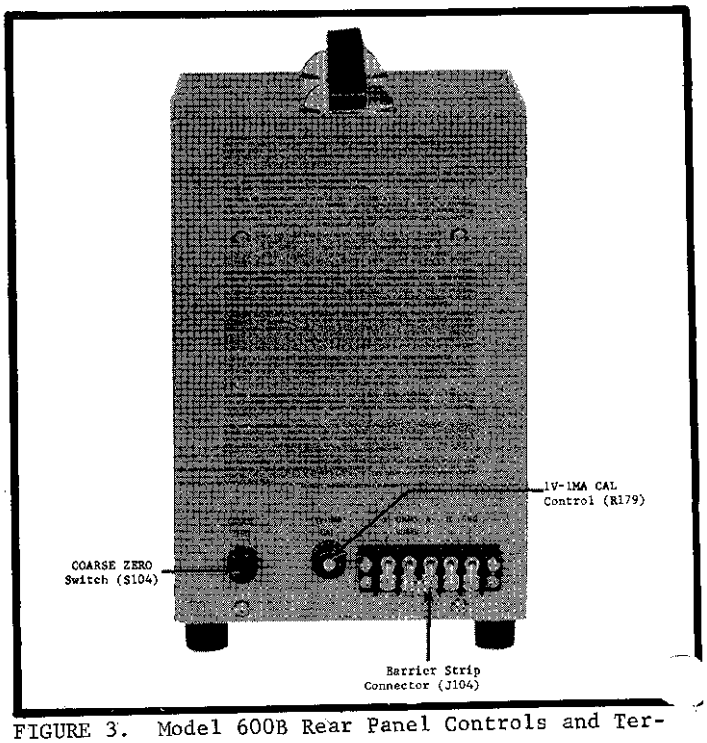

FIGURE 3. Model 600B Rear Panel Controls and Terminals.

SECTION 2. OPERATION

2-1. INPUT CONNECTIONS. The Model 600B INPUT Receptacle is a Teflon-insulated UHF connector. A shield cap is provided. The ground post, below the Receptacle, is connected to chassis ground.

a. The accessories described in Section 5 are designed to increase the accuracy and convenience of input connections. Use them to gain the maximum capability of the Model 600B.

NOTE

Techniques and applications of integrating current and measuring charge are thoroughly discussed in a brochure available from Keithley Instruments, Inc., or its representatives.

b. When working with a high impedance source carefully shield the input connection and the source since any variation in the electrostatic field near the input will cause definite meter disturbances.

c. Use high resistance, low-loss materials — such as Teflon (recommended), polyethylene or polystyrene — for insulation. Insulation leakage resistance of test fixtures and leads should be several orders of magnitude higher than the internal resistance of the source. Excessive leakage reduces the accuracy of reading from high impedance sources. Coaxial cables used should be a low noise type which employ a graphite or other conductive coating between the dielectric and the surrounding shield braid. Amphenol-Borg Electronics Corp., Microdot, Inc., and Simplex Wire and Cable Co. make satisfactory types. The supplied Input Cable insures good input connections.

NOTE

Clean, dry connections and cables are very important to maintain the value of all insulation materials. Even the best insulation will be compromised by dust, dirt, solder flux, films of oil or water vapor. A good cleaning agent is methyl alcohol, which disolves most common dirt without chemically attacking the insulation. Air dry the cables or connections after washing with alcohol or use dry nitrogen if available. Or, if available, Freon is an excellent cleaning agent.

d. When working with a high impedance source any change in shunt capacitance of the input circuit will cause disturbances in the reading. Make the measuring setup as rigid as possible, and tie down connecting cables to prevent their movement. A continuous vibration may appear at the output as a sinusoidal signal, and other precautions may be necessary to isolate the instrument and connecting cable from the vibration.

e. For low impedance measurements — below 10^8 ohms or above 10^{-8} ampere — unshielded leads may be used and a binding post adapter may be used. However, keep the leads short.

f. When the Model 600B is used on the most sensitive current range with the FEEDBACK Switch at FAST, some insulators — such as Teflon — may produce random signals which show up as erratic meter def' ctions. Insulation used in the Model 600B is carefully selected to minimize these spurious signals.

g. If a well shielded chamber and a well made high impedance transfer switch is available it is advantageous to connect the Model 600B to the circuit only when a reading is being made. In some cases, the offset current can charge the external test circuitry. One example of this occurs when measuring a capacitor's leakage resistance by observing the decay of the terminal voltage. If the leakage current is less than the offset current (less than 2×10^{-14} ampere), there may be no decay of the terminal voltage when the Electrometer is left connected across the capacitor's terminals.

NOTE

Keep the shield cap on the INPUT Receptacle when the Electrometer is not in use.

2-2. PRELIMINARY PROCEDURES.

a. Check battery condition by holding the METER Switch in the BATTERY CHECK position. Turn the Multiplier Switch to 10, 3 and 1 positions and observe the meter readings. The meter should read one-half of full scale or more in each Multiplier Switch position. Table 4 shows the batteries checked by each position. If the reading for any battery is below one-half full scale, replace the indicated battery.

TABLE 4.

Multiplier Switch Positions for Checking Conditions of Batteries.

Multiplier Position	Battery Checked
10	BA103 & BA104
3	BA101 & BA102
1	BA105

b. Set the controls as follows:

ZERO CHECK Button	LOCK
Range Switch	VOLTS
Multiplier Switch	1
FEEDBACK Switch	NORMAL
METER Switch	POWER OFF.

c. Turn the METER Switch to CENTER ZERO. Within ten seconds, the meter needle should come to the cen-

ter zero position. If not, adjust the meter zero with the front panel ZERO Control. Normally, there is no need to use the COARSE ZERO Switch.

NOTE

Using the center zero scales decreases accuracy 0.5% because the scale span is reduced.

d. After a few moments increase the voltage sensitivity by advancing the Multiplier Switch to .3, .1, etc. Continue zeroing with the ZERO Control.

e. After long periods of storage or after an overload, the Model 600B may drift excessively. The input transistors are insensitive to mechanical shock; however, a severe input overload may cause a zero offset. This is corrected with the Zero Controls. Drifting, though, can occur for several hours.

f. Although the offset current of the Electrometer is much below that found in conventional voltmeters, it can be observed on the meter. The current charges the input capacitance, and the Electrometer appears to drift when the input is open. Use the ZERO CHECK Button to discharge the charge build-up. Depressing the ZERO CHECK Button removes all signal from the amplifier.

g. Follow the particular procedures in paragraphs 2-3 to 2-6 for measuring voltage, current, resistance and charge.

2-3. VOLTAGE MEASUREMENTS.

a. The Model 600B's high input impedance allows circuit measurements without causing circuit loading. For low resistance in-circuit tests, the input resistance can be lowered to avoid pick-up problems.

NOTE

Make all voltage measurements with the FEEDBACK Switch only in the NORMAL position.

b. High Impedance Measurements (10^{14} ohms, 20 picofarads). Follow the instructions of paragraph 2-2. Set the controls as follows:

ZERO CHECK Button	LOCK
Range Switch	VOLTS
Multiplier Switch	10
FEEDBACK Switch	NORMAL
METER Switch	CENTER ZERO

Connect the unknown source to the INPUT Receptacle and unlock the ZERO CHECK Button. Set the METER Switch to + or -, as necessary. Increase the sensitivity with the Multiplier Switch. Recheck the zero setting after increasing the sensitivity.

c. Low Impedance Measurements. To decrease the input resistance from 10^{14} ohms, set the Range Switch to one of the AMPERES ranges. The input resistance is now the reciprocal of the current range. For instance, to obtain an input resistance of 10^7 ohms — which is normal for conventional VTVMs — set the Range Switch to 10^{-7} AMPERES range. Set the full-scale voltage range with the Multiplier Switch. Operating procedures are the same as subparagraph b above.

d. To measure sources more than 10 volts, use the Model 6102A 10:1 Divider Probe or the 6103A 1000:1 Divider Probe. The Model 6102A extends the Model 600B's range to 100 volts; overall accuracy is ±4% and input resistance is 10^{10} ohms. The Model 6103A extends the Model 600B's range to 10 kilovolts; overall accuracy is ±6% and input resistance is 10^{12} ohms. Follow the same operating procedures with the dividers as in subparagraph b. The full-scale voltage range is the divider ratio times the Multiplier Switch setting.

2-4. CURRENT MEASUREMENTS.

a. The Model 600B can measure currents three ways.

1. In the normal method — used on any range — the current is determined by measuring the voltage drop across a resistor shunting the amplifier input. This method is useful when lower noise is more important than faster response speeds or if some damping is needed.

2. In the fast method — for use only below the 10^{-5} ampere range — the shunt resistor is between the amplifier output and input in the feedback loop. This circuit largely neutralizes the effect of input capacity and greatly increases the response speed. Also, the input voltage drop is reduced to less than one millivolt on any range.

3. For galvanometric current measurements, the Model 600B acts as a null indicator between a very accurate current source and the unknown current source.

b. Rise time varies primarily with the current range, the input capacity and the method used. With the FEEDBACK Switch in the FAST position, the rise time on the most sensitive range is less than 2.5 seconds and on the 10^{-6} ampere range is less than 3 milliseconds. Given a choice, it is better to place the Electrometer near to the current source than to the data reading instrument. Transmitting the input signal through long coaxial cables slightly decreases the response speed and significantly increases noise due to the cable capacitance.

c. Normal Method (0.3 to 10^{-13} ampere ranges).

1. Follow the instructions of paragraph 2-2. Set the controls as follows:

ZERO CHECK Button	LOCK
Range Switch	10^{-1} AMPERES
Multiplier Switch	1
FEEDBACK Switch	NORMAL
METER Switch	CENTER ZERO.

Connect the unknown source to the INPUT Receptacle and unlock the ZERO CHECK Button. Set the METER Switch to + or -, as necessary. Increase the sen-

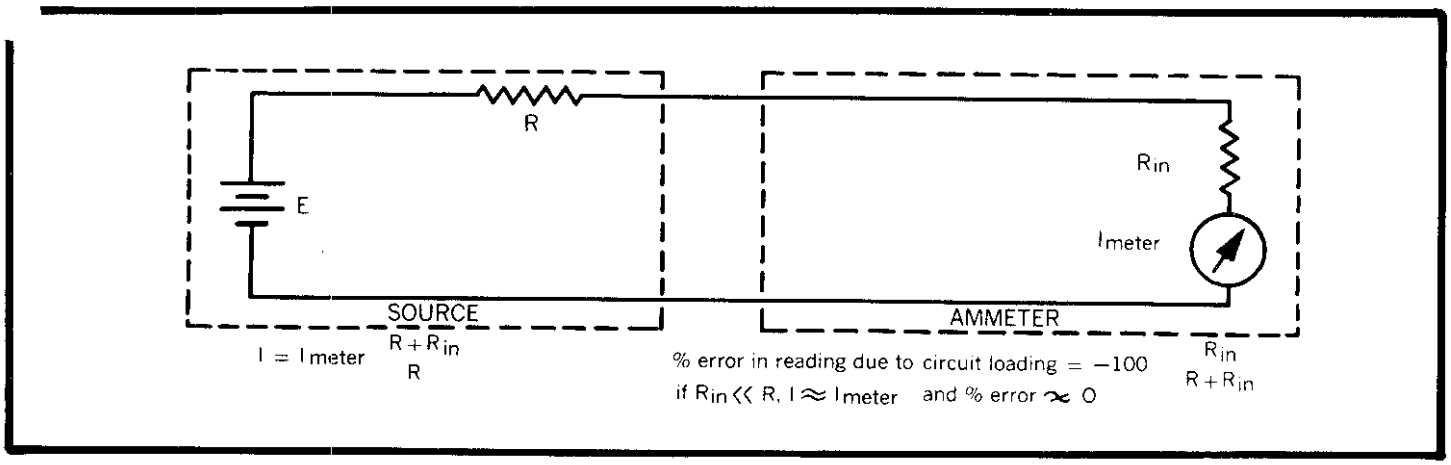

FIGURE 4. Error Due to Ammeter Resistance. Current sources may be considered a voltage (E) in series with a resistance (R). The current with the ammeter short circuited is I = E/R. With the short circuit removed, the effective input resistance of the ammeter (R_{in}) is in series with the source resistance (R). The current in the complete circuit is reduced and $I_{meter} = E/(R + R_{in})$. If the effective ammeter input resistance is small compared to R, $I_{meter} \sim I$ and the error introduced by circuit loading is negligible.

sensitivity with the Range Switch and the Multiplier Switch. Do not set the Multiplier Switch higher than 3 for Range Switch settings 10^{-3} and above. Check zero with the ZERO CHECK Button.

2. The full-scale current range is the Range Switch setting times the Multiplier Switch setting. Use the smallest Multiplier Switch setting possible to obtain the best accuracy. The input resistor varies with the Range Switch setting, from 10 ohms at 10^{-1} AMPERES to 10^{11} ohms for 10^{-11} AMPERES. The input voltage drop is the meter reading times the Multiplier Switch setting.

NOTE

On the low current ranges, balance out the offset current with the Zero Controls or subtract the value from the reading. To find the amount of offset current, cap the INPUT Receptacle and read the meter.

d. Fast Method (ranges below 10^{-5} ampere).

1. Follow the instructions of paragraph 2-2. Set the controls as follows:

ZERO CHECK Button	LOCK
Range Switch	10^{-6} AMPERES
Multiplier Switch	1
FEEDBACK Switch	FAST
METER Switch	CENTER ZERO.

Connect the unknown source to the INPUT Receptacle and unlock the ZERO CHECK Button. Set the METER Switch to + or -, as necessary. Increase the sensitivity with the Range Switch and the Multiplier Switch. Do not set the Range Switch to 10^{-5} AMPERES or higher. Check zero with the ZERO CHECK Button. Do not short the input because this will remove the feedback from the circuit.

2. The full-scale current range is the Range Switch setting times the Multiplier Switch setting. When selecting the Multiplier Switch setting, remember small settings permit lower current source resistance, and larger settings improve instrument zero stability. Check the caution in subparagraph 3a below.

3. With the fast method, the input drop is reduced and the response speed is increased at least 100 times. However, follow these cautions:

a) The internal impedance of the unknown current should not be less than .1 of the value of the feedback resistor being used. Otherwise, the full feedback voltage cannot be developed at the input, and zero instability results. The feedback resistor value is the reciprocal of the AMPERES range of the Range Switch.

b) The OHMS GUARD Terminal of the Barrier Strip Connector is no longer connected to case ground. Therefore, do not use a grounded recorder. As an alternate, use the unity-gain output (paragraph 2-8).

c) Use, with caution, the fast method to measure capacitor leakages. A very stable voltage supply must be used. Connecting a capacitor to the input changes the circuit to a differentiator, resulting in extreme sensitivity to very small voltage transients and an increase in meter noise.

e. Galvanometric Method.

1. Operate the Model 600B as a picoammeter in the fast method. Use an accurate reference current source such as the Keithley Model 261 to buck out the unknown current source. Connect as shown in Figure 5.

2. Set the METER Switch to CENTER ZERO and use the higher current ranges. Adjust the buckout current to indicate null on the Model 600B. Increase the Electrometer sensitivity as needed. When the Model 600B is as close to null as possible, the unknown current is equal to the algebraic sum of the Model 261 setting and the Model 600B current reading.

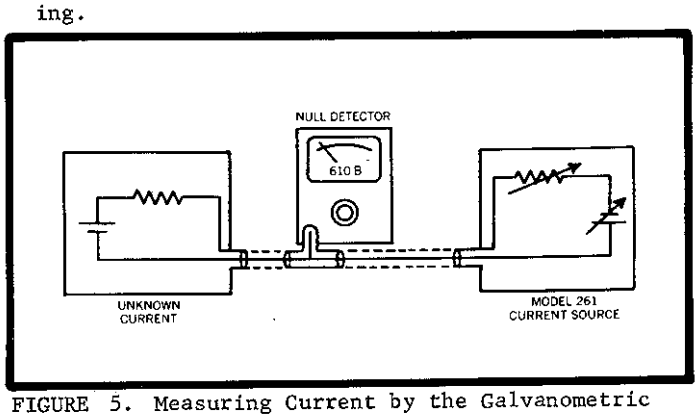

FIGURE 5. Measuring Current by the Galvanometric Method. Use an accurate reference current source to buck out the unknown current source. The Model 600B, on its current ranges, serves as a null detector. Use a UHF-tee fitting at the Model 600B input. Connect the Electrometer to the two sources with coaxial cable. Select cable carefully for very low currents (see paragraph 2-1).

2-5. RESISTANCE MEASUREMENTS.

a. The Model 600B can measure resistance by two methods.

1. In the constant current method, the Electrometer measures the voltage drop across the unknown sample as a known, constant current flows through it. The voltage drop is proportional to the resistance of the sample. In this method the Model 600B can be used in one of two different modes: normal or fast.

a) The normal mode is recommended for use from 1 kilohm to 10^{11} ohms.

b) Above 10^{11} ohms the fast method is preferred. It results in faster response speed and also nullifies leakage across the Electrometer input, since the potential across the input terminal is small.

2. In the preceding method, the voltage across the sample cannot be arbitrarily set. In some cases, as in measuring capacitor leakage, this results in excessively long testing time. In the voltmeter-ammeter method the Model 600B is used as a picoammeter. The unknown resistance sample is connected to an external known voltage source and the current through the sample is measured. Either the normal or fast method may be used. The resistance is calculated from the readings.

NOTE

Discharge any capacitor completely before removing it from the circuit. Depressing the ZERO CHECK Button shorts the input through a 10-megohm resistor, providing a discharge path.

b. Normal constant Current Method (recommended for use from 1 kilohm to 10^{11} ohms).

1. Set the controls as follows:

ZERO CHECK Button	LOCK
Range Switch	10^{11} OHMS
Multiplier Switch	1
FEEDBACK Switch	NORMAL
METER Switch	+

Unlock the ZERO CHECK Button. Check zero only with the ZERO CHECK Button.

NOTE

Do not open circuit the Electrometer on the OHMS ranges; the input will develop up to 10 volts due to its constant current characteristic. Keep the input shorted or the ZERO CHECK Button locked.

2. The full-scale ohms range is the Multiplier Switch setting times the Range Switch setting. Use the smallest Range Switch setting possible to obtain the best accuracy.

3. Before making a final reading, manipulate the Multiplier and Range Switches, so the sample is tested at a number of test potentials. The applied test voltage is the percentage of full scale that the meter reads times the Multiplier Switch setting.

4. When the test current is applied, the high terminal of the INPUT Receptacle is positive. The test current is the reciprocal of the OHMS Range setting.

NOTE

Shield the input if the resistance sample exceeds 10^8 ohms.

c. Fast Constant Current (Guarded) Method (recommended for use from 10^{11} to 10^{13} ohms).

1. Follow the instructions of paragraph 2-2. Set the controls as follows:

ZERO CHECK Button	LOCK
Range Switch	10^{12} OHMS
Multiplier Switch	1
FEEDBACK Switch	FAST
METER Switch	+

Connect the high impedance side of the resistance sample to the INPUT Receptacle and the low impedance side to the OHMS GUARD Terminal. Unlock the ZERO CHECK Button.

2. Read the resistance as in subparagraph b2 above.

d. Voltmeter-ammeter Method (to 10^{16} ohms).

1. Turn the ZERO CHECK Switch to LOCK. Connect sample between INPUT Receptacle and power supply. (See Figure 6). Put a switch in the high voltage line to ground low impedance end of the sample when it is disconnected from the potential.

2. Set the FEEDBACK Switch to NORMAL. Usually this method is best, since instabilities can arise for resistance samples less than 0.1 the value of the feedback resistor.

3. To make a measurement, start with switch S as shown in Figure 6 and make sure the ZERO CHECK Button is set to LOCK. Set switch S to apply a potential across the sample for a known period of time. Then unlock the ZERO CHECK Button and take the reading. Set the Range Switch to 10^{-1} AMPERES and increase sensitivity until a reading is obtained.

4. To remove the sample, set the ZERO CHECK Button to LOCK and set switch S back to ground as shown in Figure 6.

5. If the potential applied is at least 100 times the full-scale input drop (Multiplier Switch setting), the resistance is equal to the applied potential divided by the current reading. The high voltage sensitivity of the Model 600B, therefore, permits external voltages of 0.1 volt or more to be used.

6. If the potential applied is less than 100 times the input drop, the resistance is equal to the difference between the applied potential and the input drop, all divided by the current reading.

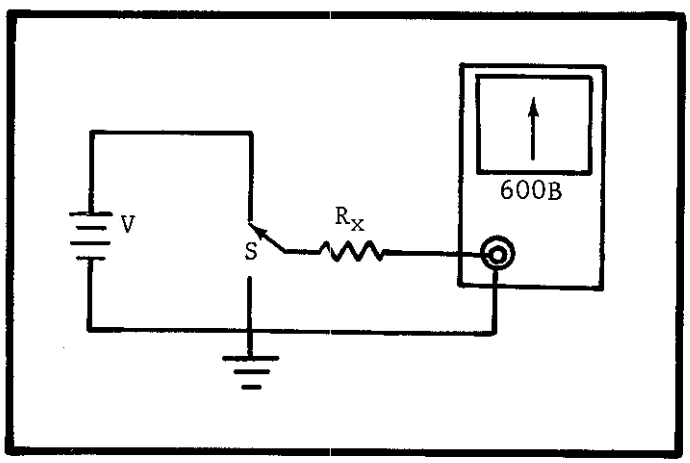

FIGURE 6. Measuring Resistance by the Voltmeter-Ammeter Method. A potential from a known source, V, is applied to the unknown resistance sample, R_X. The Model 600B measures the current through R_X, from which the resistance is calculated. Switch S connects the low end of R_X to ground when no potential is applied.

7. If the current is read by the fast method, the input drop is so slight that it need not be included in the calculation. If the capacity shunted across the sample is large, such as encountered in capacitor leakage measurements, the faster method increases response speed and this connection is recommended. Note, however, that power supply transients will be magnified.

2-6. CHARGE MEASUREMENTS.

a. Follow the instructions of paragraph 2-2. Set the controls as follows:

ZERO CHECK Button	LOCK
Range Switch	10^{-7} COULOMBS
Multiplier Switch	.01
FEEDBACK Switch	FAST
METER Switch	CENTER ZERO.

Unlock the ZERO CHECK Button and then connect the unknown source to the INPUT Receptacle. If the Electrometer reads off scale, increase the Multiplier Switch setting. If the sensitivity is not enough, decrease the Multiplier Switch setting until the reading is on scale. Changing the Multiplier Switch setting does not affect the transfer of charge from the unknown source to the instrument. If increasing sensitivity with the Multiplier Switch does not bring the reading on scale, increase sensitivity with the Range Switch and repeat the above steps.

b. The full-scale charge range is the Range Switch setting times the Multiplier Switch setting. Input offset contributes a charge of 2×10^{-14} coulomb per second maximum.

c. Use the ZERO CHECK Button to discharge the integrating capacitor. Discharge for at least 20 seconds on the 10^{-7} coulomb range before making another measurement. On the 10^{-8} coulomb range, discharge for at least two seconds.

2-7. RECORDER OUTPUTS.

a. The Model 600B uses a Barrier Strip Connector on its rear panel for all recorder output connections. The output of the Model 600B may be used to drive servo rebalance recorders, oscilloscope and pen recorders. The Model 600B has two recorder outputs, ±1 volt and ±1 milliampere, to amplify signals within 1/2% for recorders, oscilloscopes and similar instruments. These can be used on all ranges of the Model 600B.

b. For recording with the Model 600B, use the Keithley Model 370 Recorder for ease, economy, versatility and performance. The Model 370 is a pen recorder with 10 chart speeds and 1% linearity. Interface problems often encountered between a measuring instrument and a recorder are avoided using the Model 370. No preamplifier is needed. No special wiring is required. When using the Model 370 make sure the Recorder's sensitivity control is set to maximum (completely clockwise). (See Section 5 for more on the Model 370.)

WARNING

The Model 600B may be used with the FEEDBACK Switch in FAST position with other instruments. However, make sure there is no common ground connection between low terminals of the Electrometer and other instruments.

c. 1-Volt Output. Place the shorting link between the OHMS GUARD Terminal and Terminal A. Connect oscilloscopes and pen recorder amplifiers to the OHMS GUARD Terminal and Terminal B on the barrier strip connector. Adjust the 1V - 1MA CAL Control for full-scale recorder deflection to correspond with full-scale meter deflection. Output is ±1 volt. Internal resistance is 1000 ohms. Accuracy is within 1%. The frequency response (-3db) is dc to 1kHz at a gain of 100, rising to 50kHz at gains of 1 and below. Full output response is limited to 3kHz on any gain. Noise is less than 1% rms of full scale at a gain of 100, decreasing to less than 0.1% at gains below 10. The METER Switch does not reverse the output polarity. Output polarity is opposite input polarity.

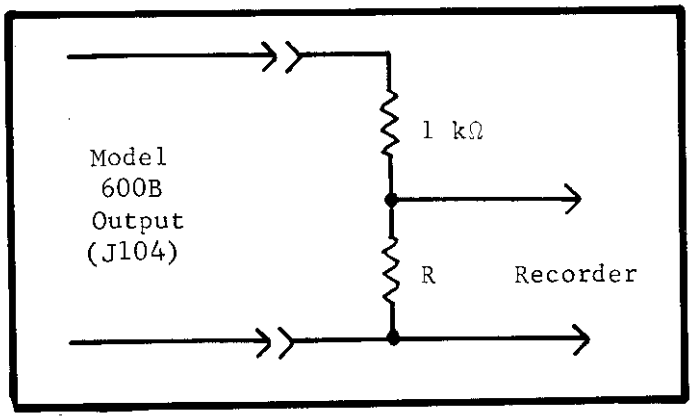

FIGURE 7. Divider Circuits Across Model 600B Output for Driving 50 and 100-millivolt Recorders. Use 5% resistors in the dividers. The value of resistor R is one ohm for every 1mV of output.

d. 1-Milliampere Output: Connect 1-milliampere instruments to the OHMS GUARD Terminal and Termina B on the Barrier Strip Connector and remove the shorting link. The output is approximately 1 milliampere for full-scale meter deflection on any range. For exact output, adjust the meter on the .01 volt range with the ZERO Control for full-scale deflection. Then adjust the 1V - 1MA CAL Control until the recorder reads full scale. Check the recorder and meter zero and repeat adjustment if necessary. The METER Switch does not reverse the output polarity (opposite input polarity).

e. For servo rebalance recorders, use a divider of not greater than a total of 2 kilohms across the Model 600B Barrier Strip Connector. See Figure 7 Connect as for 1-milliampere output (sub-paragraph d above). Adjust as in sub-paragraph d above. Operation is the same as for current outputs.

f. When the FEEDBACK Switch is in the NORMAL position, the negative terminal of the Barrier Strip Connector is connected to the instrument case. Therefore, no difficulty will be experienced using oscilloscopes and recorders with the Model 600B set for normal operation. In FAST position, however, neither output terminal is grounded. If this is used, make sure there is no common ground between the recorder or oscilloscope and the Model 600B case, or use the unity-gain output.

2-8. UNITY GAIN OUTPUT. The unity-gain amplifier can be used as an impedance matching device to minimize circuit loading errors or for convenient connections to a recorder when the FEEDBACK Switch is in FAST position.

a. The unity-gain output is equal to the input within 25 ppm when the load resistance is 100 kilohms or greater. By placing the Model 600B between a 10^{10} ohm source, for example, and a 0.01% voltmeter with a 1-megohm input resistance, overall accuracy better than 0.025% can be achieved.

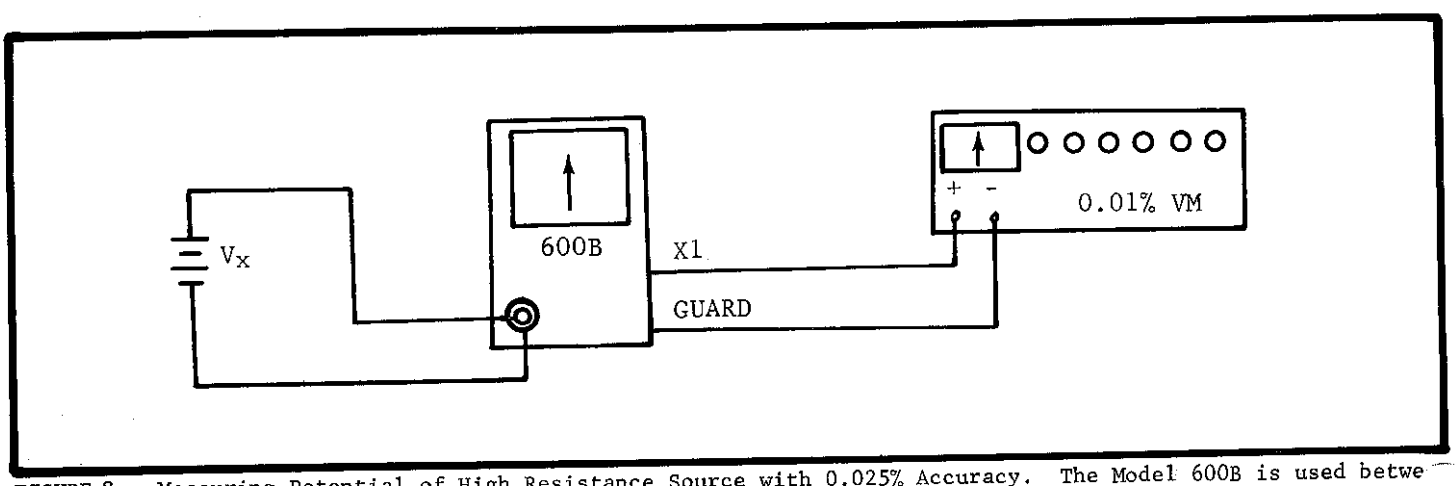

FIGURE 8. Measuring Potential of High Resistance Source with 0.025% Accuracy. The Model 600B is used betwe a high-resistance source, V_X, and a 0.01% voltmeter to obtain high accuracy without causing circuit loading. The digital voltmeter or, as above, the Keithley Model 662 Differential Voltmeter connects to the Model 600B unity-gain terminals.

1. Connect the voltmeter to the X1 and OHMS GUARD Terminals as shown in Figure 8. The OHMS GUARD Terminal is at ground with the FEEDBACK Switch in NORMAL. Maximum output amplitude is 10 volts peak-to-peak.

2. Adjust the Model 600B Zero Controls to obtain a zero-voltage reading on the external voltmeter. Make sure the latter's sensitivity is high enough for a precise zero adjustment.

b. When the FEEDBACK Switch is in FAST position, the unity-gain terminals permit more convenient connections to oscilloscopes with a load resistance of greater than 100 kilohms without special precautions. In this mode, the X1 Terminal is grounded and the OHMS GUARD Terminal delivers an output equal to the input signal.

SECTION 3. CIRCUIT DESCRIPTION

1. GENERAL.

a. The Keithley Model 600B is basically an extremely stable and linear dc voltmeter with a full-scale sensitivity of 10 millivolts and an input impedance of 10^{14} ohms shunted by 20 picofarads. By using the front panel controls, shunt resistors and capacitors are selected to make measurements over a total of 67 voltage, current, resistance, and coulomb ranges. Current and resistance are measured using precision resistance standards, from 10 ohm wirewound resistors to 10^{11} ohm glass sealed, deposited carbon resistors. Coulombs are measured using close tolerance polystyrene film capacitor standards.

b. Batteries furnish the necessary amplifier power.

3-2. VOLTMETER OPERATION.

a. The Model 600B employs matched insulated-gate, field-effect transistors followed by a transistor differential amplifier with a high-voltage complementary output stage. Figure 9 shows the block diagram for the voltmeter mode of operation.

b. Voltmeter operation of the Model 600B is as follows:

1. The amplifier is always in a unity-gain, input voltage to output current converter configuration. The internal circuitry is arranged such that a full scale input voltage (e_i) results in exactly a 1 milliampere output current through the divider string composed of Rm, R177, and the meter. Voltage gain of the circuit is determined by the ratio of R177 to R_m. Output is taken across R177.

2. The voltage drop across the amplifier is

$$e_a = \frac{e_i}{K+1}$$

where K is the amplifier loop gain, greater than 5×10^5 on all ranges.

c. The complementary output stage, Q109 and Q110, drives the amplifier ground at the same potential as the input signal. Thus the input impedance is maintained for any value input voltage and the need for input dividers is eliminated. The amplifier ground is not chassis ground, but it is connected directly to the unity gain output.

NOTE

Refer to Schematic Diagram 22808E for circuit designations.

3-3. VOLTMETER CIRCUIT.

a. The amplifier input stage is a pair of insulated-gate, field-effect transistors, Q111 and Q115, in a differential configuration. The gate of Q111 is returned to amplifier common, the unity gain output.

b. Depressing the ZERO CHECK Button, S102, places the gate of the active insulated gate devices at zero potential.

c. The input stage is followed by a transistor differential amplifier, composed of Q101A-Q108. Q106 and Q107 make up the output gain stage, which is utilized in a gain multiplier configuration. This stage provides the remainder of the high gain required by the

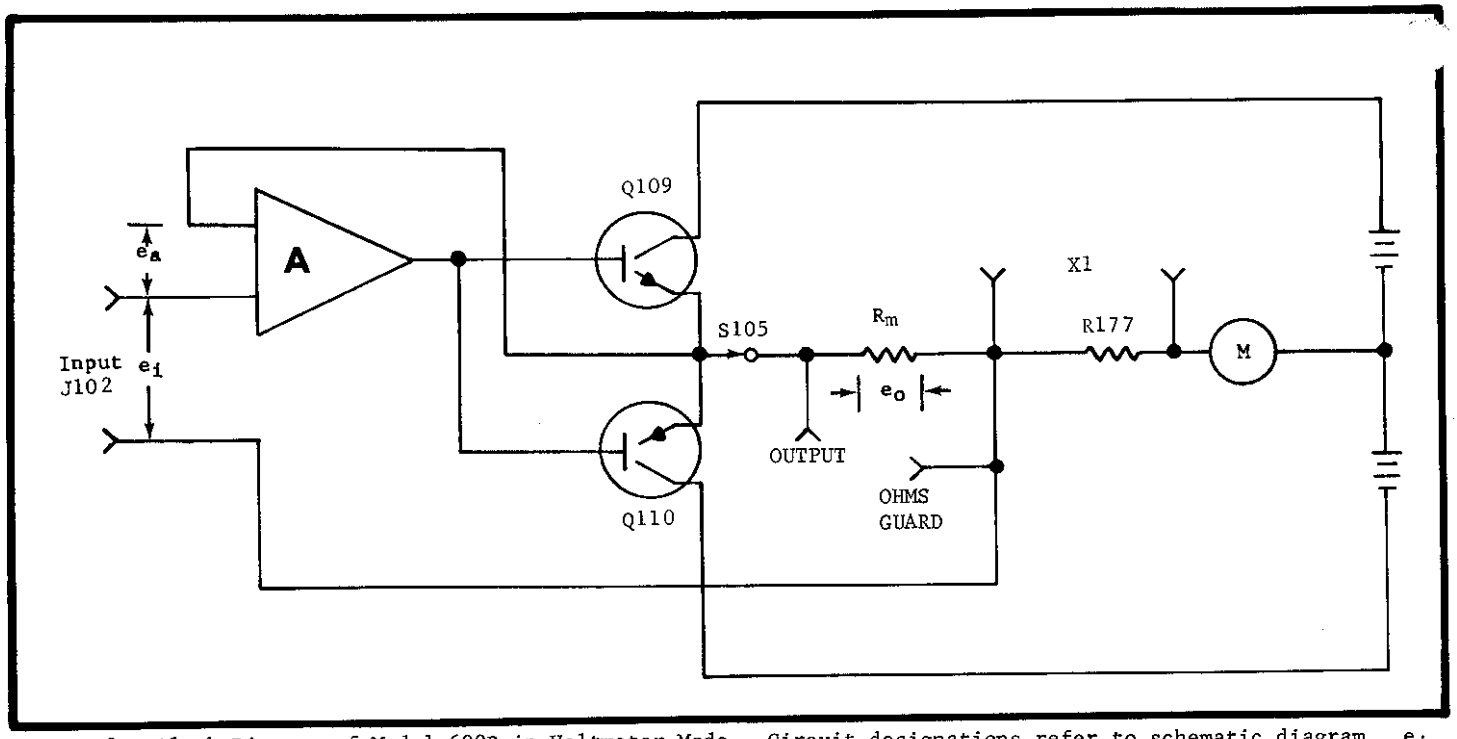

FIGURE 9. Block Diagram of Model 600B in Voltmeter Mode. Circuit designations refer to schematic diagram. e_i is the input voltage; e_a is the voltage drop across the amplifier. S105 is the Multiplier Switch, R_m is the resistor for a given Multiplier Switch setting; R177 is the output resistor; e_o is the voltage drop across R_m.

amplifier. Also, this stage prevents fold-over and lock-up with positive input overloads. Diode D101, between base and emitter of Q108, prevents fold-over and lock-up under negative input overloads.

d. Frequency compensation networks provide a controlled frequency characteristic to insure stability under all conditions of capacitive loading on input and output while on any range.

e. The recorder output is derived from the current flow from Q109 and Q110 through the divider, R_m, R177, and the meter. With the shorting link between the OHMS GUARD Terminal and Terminal A (paragraph 2-7c) ±1 volt for full scale deflection is obtained at the output by ±1.1 milliamperes flowing through the divider. With the shorting link between the OHMS GUARD Terminal and Terminal B (paragraph 2-7d) ±1 milliampere, ±5%, is obtained at the output.

3-4. AMMETER OPERATION.

a. Normal Method. In the normal method of current measurements (FEEDBACK Switch in NORMAL position), one of the Range Switch resistors, R136 through R146, shunts the input. (See Figure 10). The Model 600B then measures the voltage drop across the resistor. The meter is calibrated to read the current in amperes for the appropriate range.

b. Fast Method. In the fast method of current measurements (FEEDBACK Switch in FAST position), the Model 600B functions as an ammeter with negative feedback. The differential amplifier output is divided by the Multiplier Switch resistors, R168 to R174, and fed back to the amplifier input through a feedback resistor selected with the Range Switch. (See Figure 10). Floating ground is connected to the low impedance side of the input, and the output ground is floating. This method increases the response speed by minimizing the effects of input capacity; it also reduces the input drop to less than 1 millivolt.

3-5. OHMMETER OPERATION.

a. Normal Method. In the normal method of resistance measurements (FEEDBACK Switch in NORMAL position), the Model 600B uses a constant-current, voltage-drop circuit. Refer to Figure 11. R_x is the unknown resistor. A voltage source, E, applies a potential across R_x. The source is obtained from the batteries through the resistor divider network, R128 through R130. E varies depending upon the OHMS range used. The voltage source is connected between floating ground and the input gate of Q115 through R_s, the range resistor. R_s is one of the resistors, R136 through R146. I is equal to E/R_s, regardless of the value of R_x, as long as the voltage drop across R_x does not exceed the Multiplier Switch setting. This circuit provides a true source regardless of the input. The Model 600B can then measure the voltage drop across R_x and indicate the resistance value on its calibrated meter.

b. Guarded Method. In the guarded method of resistance measurements (FEEDBACK Switch in FAST position and the sample resistance connected between the IN Terminal, J102, and the GUARD Terminal), feedback applied through the sample. Refer to Figure 11. The circuit is similar to the normal method, except for

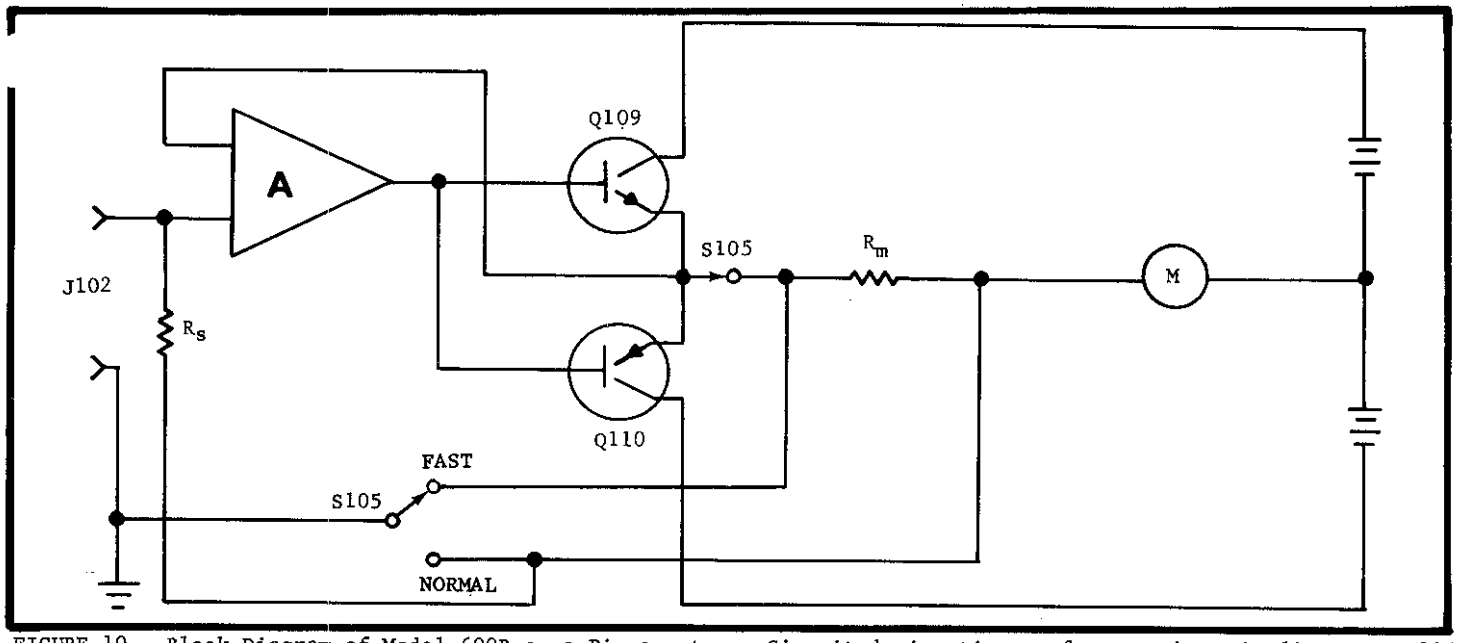

FIGURE 10. Block Diagram of Model 600B as a Picoammeter. Circuit designations refer to schematic diagram. S105 is the Multiplier Switch; R_m is the resistor for a given setting. R_s is the resistor selected by the Range Switch S101. S103 is the FEEDBACK Switch.

the feedback. This reduces the slowing effect of the instrument's input capacity. Leakage error is also reduced since the potential across the INPUT Terminal is small. In this mode, floating ground is connected the low impedance side of the input and the output ground is floating. The GUARD Terminal is at output ground potential.

3-6. COULOMBMETER OPERATION. The Model 600B circuit for measuring charge is similar to that used for an ammeter with the fast method. A negative feedback is applied around a shunt capacitor, C110 to C113, selected with the Range Switch. The shunt capacitor replaces R_s in Figure 10. The stored charge is proportional to the voltage across the capacitor, which is measured by the Model 600B voltmeter circuits.

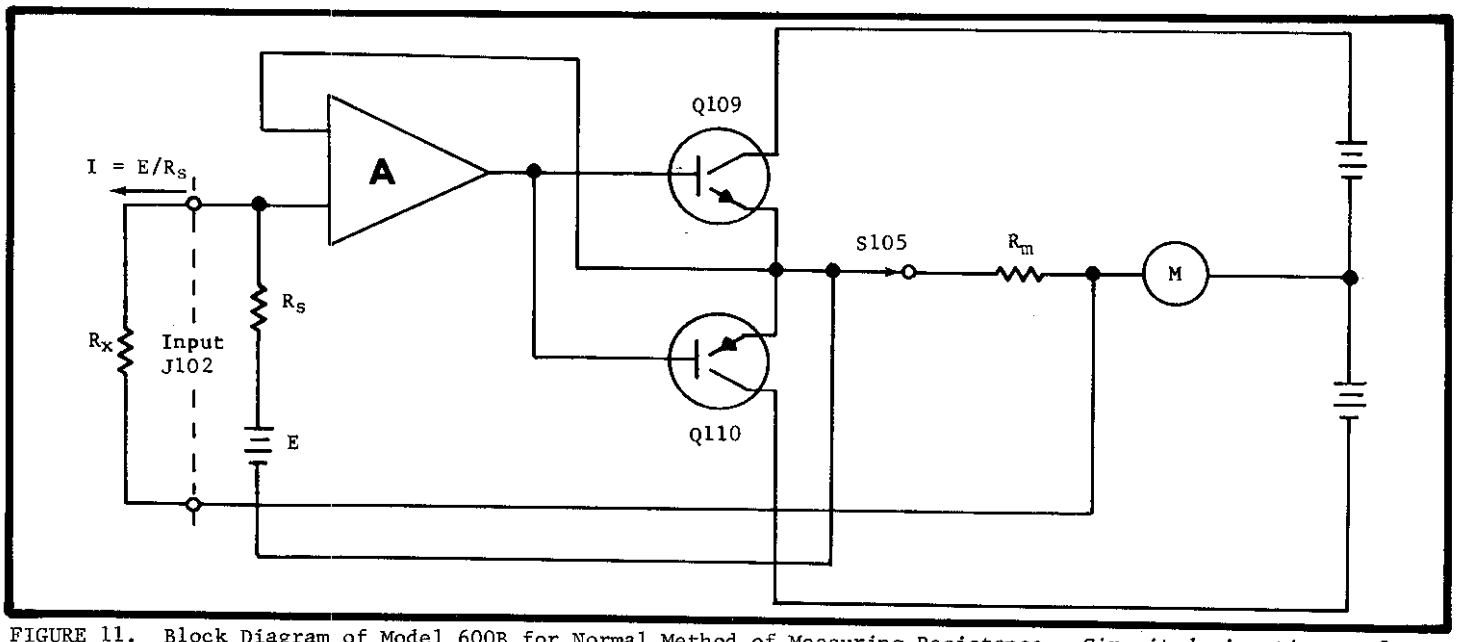

FIGURE 11. Block Diagram of Model 600B for Normal Method of Measuring Resistance. Circuit designations refer to schematic diagram. S105 is the Multiplier Switch; R_m is the resistor for a given setting. R_x is the unknown resistance being measured; E is the voltage source (see paragraph 3-5); R_s is the range resistor selected with the Range Switch.

SECTION 4. SERVICING

4-1. GENERAL. Section 4 contains the maintenance and troubleshooting procedures for the Model 600B Electrometer. Follow these procedures as closely as possible to maintain the performance of the instrument.

4-2. SERVICING SCHEDULE. Periodically check the condition of the batteries, using the convenient battery check as described in paragraph 2-2. Except for battery replacement, the Model 600B requires no periodic maintenance beyond the normal care required of high-quality electronic equipment. The value of the high-megohm resistors, R144, R145 and R146 should be checked approximately every 6 months for specified accuracy.

4-3. PARTS REPLACEMENT.

a. The Replaceable Parts List in Section 7 describes the electrical components of the Electrometer. Replace components only as necessary. Use only reliable replacements which meet the specifications.

b. The MOS FET input transistors, Q115 and Q111, are specially selected and matched; order only as a plug-in unit, part number 21850B, from Keithley Instruments, Inc.

4-4. TROUBLESHOOTING.

a. The procedures which follow give instructions for repairing troubles which might occur in the Model 600B. Use the procedures outlined and use only specified replacement parts. Table 5 lists equipment recommended for troubleshooting. If the trouble cannot be readily located or repaired, contact Keithley Instruments, Inc., or its representatives.

b. Table 6 contains the more common troubles which might occur. If the repairs indicated in the table do not clear up the trouble, find the difficulty through a circuit-by-circuit check such as given in paragraph 4-5. Refer to the circuit description in Section 3 to find the more critical components and to determine their function in the circuit. The complete circuit schematic, 22808E, is in Section 7.

4-5. PROCEDURES TO GUIDE TROUBLESHOOTING.

a. If the instrument will not operate, check the condition of the batteries (paragraph 2-2). Then make sure the shorting link is connected between the OHMS GUARD and A Terminals on the Barrier Strip Connector. If these are found satisfactory, use the following procedures to isolate the trouble.

b. The schematic diagram indicates all transistor terminal voltages referenced to either floating ground or output ground; a properly operating Electrometer will have these values ±10%, if operating from fres

TABLE 5.
Equipment Recommended for Model 600B Calibration and Troubleshooting. Use these instruments or their equivalents.

Instrument	Refer to Paragraph
Fairchild Model 7050 Digital Voltmeter	5-4,5-11
Hewlett-Packard Model 400 AC VTVM	5-12
Hewlett-Packard Model 3400A RMS Voltmeter	5-7
Keithley Instruments Model 153 Microvolt Ammeter	4-5
Keithley Instruments Model 241 Voltage Supply	5-6,5-11
Keithley Instruments Model 260 Nanovolt Source	5-4,5-5,5-11
Keithley Instruments Model 261 Picoampere Source	5-11
Keithley Instruments Model 370 Recorder	5-9
Keithley Instruments Model 515 Megohm Bridge	5-10
Keithley Instruments Model 5155 High Megohm Resistance Standards	5-11
Keithley Instruments Model 662 Differential Voltmeter	5-6
Tektronix Model 561A Oscilloscope	5-11
Wavetek Function Generator	5-12
10:1 and 100:1 Dividers	5-12

TABLE 6.
Model 600B Troubleshooting.

Difficulty	Probable Cause	Solution
Excessive zero offset	Input transistors may be defective.	Check Q115 and Q111; replace if faulty.
	Batteries failing.	Replace batteries (paragraph 2-2).
Excessive offset current	Excessive temperature fluctuation or defective input transistors.	Check Q115 and Q111; replace if faulty.
	Instrument not used.	Run for seven hours.
Cannot zero meter on any range.	See paragraph 4-5.	See paragraph 4-5c, step 6.
Unable to zero meter on most sensitive range.	Incorrect gate voltage on input transistors.	Check per paragraph 4-5.
Meter will not zero on one Multiplier Switch setting.	Faulty resistor for setting of Multiplier Switch.	Check resistors; replace if faulty.
10^{-10} to 10^{-14} ampere current ranges are out of specifications.	Defective high megohm resistors.	Check per paragraph 5-10.

batteries. The control settings for these values are the Range Switch at VOLTS, Multiplier Switch at 1, and the meter zeroed. Measurements are with the Model 153.

c. Amplifier.

1. To check the amplifier, disconnect the feedback loop by removing transistors Q108, Q109 and Q110. This allows each stage of the amplifier to be individually checked. It also eliminates the possibility of applying excessive voltage to the input transistors, causing serious damage.

2. Connect the Model 153 between the drains of Q115 and Q111. Adjust the ZERO Controls for null. If a null cannot be reached, check the ZERO Control circuits (Resistors R147 to R164), and transistors Q115 and Q111. Check Q115 and Q111 by removing them and adjusting for null again. If null is now reached, replace the transistor pair with a new pair.

3. Check the next stage by connecting the Model 153 across the emitters of Q101 and Q102 and adjusting the ZERO Controls for null. If null is not reached, check this stage and the base circuit of the next stage. Check the base circuit by removing transistors Q103 and Q104 and again adjust for null. If null is now reached, replace the transistor pair with a new pair.

4. Check the next stage by connecting Model 153 across the collectors of Q103 and Q104 and adjusting the ZERO Controls for null. If null is not reached, check this stage and check for shorts in the base circuit of Q105 and Q106.

5. Connect Model 153 to the collector of Q107. Adjust the ZERO Controls for null. If null is reached, the dc amplifier is operating correctly and the trouble is in the output stage, feedback stage or in transistor Q108.

6. The feedback loop includes the multiplier resistors, R168 through R174, the recorder output resistors, R177 on 1V position or R178 and R179 on 1 MA position, and the meter. An opening of any of these prevents zeroing for only that particular Multiplier Switch setting.

7. Troubleshoot the output stages, transistors Q108 through Q110, by making voltage measurements with Model 153 to within ±10% of the specified schematic value.

SECTION 5. CALIBRATION

5-1. GENERAL.

a. The function of the Calibration Section is to provide a method of checking the Model 600B to make sure that it operates properly and within the specifications given in Table 1 on page ii.

b. The following procedures are recommended for adjusting and calibrating the Model 600B. Use the equipment recommended in Table 5 or their equivalents. If proper facilities are not available or if irremediable trouble is encountered, refer to troubleshooting procedures in Section 4, or contact Keithley Instruments, Inc., or its representatives.

c. If returning the instrument to Keithley Instruments for repair or calibration, use the Repair and Calibration form at the rear of this manual. Use of this form will clarify difficulties that may arise and will result in continued good service. When using this form, please detach along the dotted line.

d. The figures at the end of this section show the component layouts for the Model 600B. Refer to them for finding desired components for adjusting the instrument. Refer also to the circuit description in Section 3 and the schematic diagrams at the rear of the manual to identify the more critical components. Also, the Replaceable Parts List in Section 7 calls out the components and the Figure picturing each component.

NOTE

Unless otherwise stated, all the following calibration procedures will be made with the FEEDBACK Switch set to NORMAL and the output set for 1 volt as described in paragraph 2-7c.

TABLE 7.
Model 600B Internal Controls. The Table lists all internal controls and the paragraph describing the adjustment.

Control	Circuit Desig.	Refer to Paragraph
Meter Calibration	R123	5-4
Center Zero Calibration	R121	5-4

5-2. CALIBRATION SCHEDULE.

a. Check offset current (paragraph 5-8) at regular intervals to make sure the input transistors are functioning correctly.

b. Verify the value of the high-megohm resistors (paragraph 5-10) approximately every six months.

c. Calibrate the meter zero (paragraph 5-4) about once a year or when components are replaced.

d. Check the Model 600B accuracy (paragraph 5-11) once a year, after the other adjustments, or if improper operation is suspected.

5-3. PRELIMINARY PROCEDURES.

a. Battery Check. Check the condition of the batteries as outlined in paragraph 2-2a and Table 4.

b. Zero Balance. Set the Model 600B to the 10-volt range and turn the instrument on. Set the ZERO CHECK Button to LOCK.

1. If the unit is operative, the meter should be on scale, + or -. Zero the meter with the ZERO Controls. Increase the voltage sensitivity in steps to the 10 millivolt range by advancing the Multiplier Switch to 1, .3, .1, etc. Zero the instrument on each range.

2. If the instrument is inoperative, meter pinned, etc., check error in setup and obvious problems before initiating detailed troubleshooting.

5-4. MECHANICAL METER SET, METER ZERO AND OUTPUT CALIBRATION. Zero whenever other adjustments are made.

a. To set the mechanical Zero meter, turn the METER Switch to METER OFF and set the mechanical Zero Meter adjustment for zero meter reading (top-scale zero).

b. To calibrate meter zero, turn the Model 600B on. Zero the meter on the .01 Multiplier Switch setting. Then set the Multiplier Switch to 10; apply 10 volts ±0.05% with the Model 260 Nanovolt Source to the Model 600B INPUT Receptacle. Connect the Model 7050 DVM between the X1 and OHMS GUARD Terminals. Adjust the ZERO Control for 1.000 volt at the X1 output. Adjust the Meter Cal Potentiometer, R123, for full scale meter reading.

c. To calibrate the output, make sure the output at the X1 Terminal is still 1 volt, then connect the Model 7050 DVM between the B and OHMS GUARD Terminals. Adjust the rear panel 1V-1 MA CAL Control, R179, for exactly 1.000 volt at the output.

d. Set the center zero by first zeroing the meter on the .001 Multiplier Switch setting. Then switch to the 1 position. Set the METER Switch to CENTER ZERO and adjust the Zero Center Cal potentiometer, R121 for exact center scale meter zero.

5-5. METER TRACKING CHECK. Set the Model 600B METER Switch to +, the Multiplier Switch to 1 volt and apply 1 volt to the input with the Model 260 Nanovolt Source.

a. If the 1 volt range has good accuracy, then the meter should indicate full scale. If not, use the or 10 volt range; whichever has the best accuracy.

b. Check the meter 0-10 scale for no more than 1% /2 division) tracking error going from zero to full scale in one-tenth of full scale voltage steps.

5-6. UNITY GAIN CHECK.

a. Zero check the Model 600B and set the instrument to the 10 volt range. Connect the Model 241 Voltage Supply to the Model 600B INPUT Receptacle and to the Model 662 Differential Voltmeter High terminal. Connect the Electrometer X1 Terminal to the Low terminal of the Model 662. Set the Model 662 dial to 0 and the Null Switch to 1 millivolt. The Model 662 should indicate at or near zero.

NOTE

A large transient is generated when the Model 241 is switched from Standby to Output. To prevent false indication, set the Model 241 to Output and use the voltage dial (0 or 10 volts) when making this check.

b. Set the Model 241 to zero volts, release the Electrometer ZERO CHECK Button and note that the Model 662 null remains the same.

1. Apply +10 volts to the Model 600B input with the Voltage Supply. The Differential Voltmeter null indication should not change more than 0.25 millivolt, indicating a unity gain within 25 ppm.

2. Repeat the test of subparagraph 1 above using -10 volts.

c. The unity gain specification of 25 ppm applies to the 10 volt Multiplier Switch setting only and increases to 300 ppm or more on the lower ranges. If the unity gain figure is too large, then the .01 Multiplier Switch setting will be out of tolerance. If this is suspected, check the voltage ranges (especially the .01 volt range) for accuracy (paragraph 5-11). If the .01 volt range is out of tolerance, then it is probably due to a mismatch of FETs Q111 and Q115. Replace the FETs, Keithley part number 21850B.

5-7. NOISE CHECK. Zero check the Electrometer and connect the output to a Hewlett-Packard Model 3400A RMS Voltmeter.

a. Set the METER Switch to CENTER ZERO and zero the Model 600B on the 10 millivolt range.

b. The output noise must be less than 10 millivolts rms on the 10 millivolt through 10 volt ranges.

5-8. OFFSET CURRENT CHECK. Check offset current whenever excessive noise or drift is suspected. To read the offset current of the Model 600B, set the front panel controls to:

ZERO CHECK Button	LOCK
Multiplier Switch	.01
Range Switch	10^{-11} AMPERES
FEEDBACK Switch	FAST
METER Switch	+

Cap the INPUT Receptacle and unlock the ZERO CHECK Button. The offset current indicated on the meter should be less than 2×10^{-14} ampere. (This is less than 20% of full scale). If this is exceeded, check the battery condition and the input transistor, Q115. If the instrument has not been used for a long time, allow it to run 7 hours before checking the offset current.

5-9. DRIFT CHECK. The unit must be off at least one hour prior to a drift run.

a. Set the front panel controls to:

ZERO CHECK Button	LOCK
Multiplier Switch	.01
Range Switch	VOLTS
FEEDBACK Switch	NORMAL
METER Switch	+

Make connections to the Barrier Strip Connector for 1 milliampere output (paragraph 2-7d).

b. Connect Model 600B to the Model 370 Recorder. Adjust Recorder sensitivity control completely clockwise (maximum sensitivity) and the 1 MA CAL Control of Model 600B for full recorder deflection. Make sure Model 600B chassis cover is attached with at least two screws.

c. Make two drift runs with the Model 600B to determine time and temperature stability individually. For each run allow the Electrometer to warm up for 1/2 hour. A zero drift of less than 2 millivolts after the first half hour is indicative of a satisfactory temperature coefficient. After the first half hour, the time stability should be less than 2 millivolts per 24 hours. The offset due to temperature should be less than 200 microvolts per °C.

d. If the instrument does not meet the zero drift specification, check the batteries. If the batteries are satisfactory and the instrument still does not meet the zero drift specification, the input transistors are faulty.

NOTE

If new batteries have been installed, the Model 600B zero drift will be exceeded for at least 24 hours. Age the unit for 24 hours to enable the battery terminal voltages to stabilize.

5-10. HIGH-MEGOHM RESISTOR VERIFICATION.

a. About every six months it is necessary to check the value of the high-megohm resistors, R144 to R146 on the Range Switch. The instrument should be within its rated accuracy for two or three years from the time it leaves the factory. After this, some of the resistors may drift out of tolerance and should be replaced. Faulty high-megohm resistors will affect the accuracies of measurements for the 10^{-9} to 10^{-11} AMPERES and the 10^{8} to 10^{12} OHMS settings of the Range Switch.

b. To check these resistors, it is necessary to use a bridge capable of better than 1% accuracy up to 10^{11}

ohms such as the Keithley Instruments Model 515 Megohm Bridge. If such equipment is not available, two procedures are recommended to check out the resistors:

1. Return the complete instrument to the factory for resistor calibration.

2. Replace the high-megohm resistors periodically with a certified set from Keithley Instruments to assure absolute calibration accuracy.

5-11. ACCURACY CHECK.

a. Checking the accuracy is the quickest way to spot faulty Model 600B operation. Perform the check about once a year, if components are replaced, or if other adjustments are made. If accuracy is verified over all ranges, the Model 600B should be able to meet all specifications. If the accuracy must be checked often, check the stability.

b. Voltage: Connect the Model 600B input to the Model 241 and monitor the output with the Model 7050 DVM. First, set the Model 600B for the 10-volt range. Increase the input voltage in 1-volt steps from 0 to 10 volts. The Model 600B should indicate the input voltage to ±2% of full scale. Perform the same operation in the 3-volt range. Connect the Model 600B to the Model 260. Check the other voltage ranges for accuracy of ±2% of full scale. Make sure the shorting link on the Barrier Strip is connected between OHMS GUARD and terminal A.

c. Current: Connect the Model 600B to the Model 261 and monitor the output with the Model 7050 DVM. Check the full-scale accuracy of all the current positions on the Range Switch. For the 10^{-6} to 10^{-11} AMPERE settings of the Range Switch, set the FEEDBACK Switch to FAST and the Multiplier Switch to 1. The Model 602 should indicate the input current to ±3% of full scale to the 10^{-10} ampere range; ±5% of full scale from the 3 x 10^{-11} to 10^{-13} ampere ranges. For the ranges above 10^{-5} ampere, construct a current source whose output is ±0.25%. Set the Model 600B FEEDBACK Switch to NORMAL and the Multiplier Switch to .01 when calibrating these ranges.

NOTE

For 10^{-1} ampere through 10^{-5} ampere ranges, a larger Multiplier Switch setting will result in inaccuracies due to loading of the current source; hence the .01 Multiplier Switch setting must be used. The appropriate current source is two decades less than range setting; that is, on the 10^{-1} ampere range use 10^{-3} ampere source, etc.

d. Resistance. Connect the high side of a Keithley Model 5155 Resistor to the Electrometer INPUT Receptacle and the low side to the OHMS GUARD Terminal. Check full scale accuracy of all ohm positions on the Range Switch by measuring the voltage drop of the known current across the known sample with the Model 600B. Test current applied is the reciprocal of the OHMS Range setting. Check the 10^3 through 10^8 ohm ranges for an accuracy of ±4% of full scale by using the resistance measurement method as described in paragraph 2-6b (FEEDBACK Switch in NORMAL). Check the 3 x 10^8 th[illegible] h 10^{13} ohm ranges for an accuracy of ±5% of full sca[illegible] by employing the resistance measurement method as described in paragraph 2-6c (FEEDBACK Switch in FAST).

e. Charge. To check the accuracy of the Model 600B as a charge amplifier, set the FEEDBACK Switch to FAST. Apply 10 volts from the Model 241 Voltage Supply through a Model 5155 10^{11} ohm Standard to the Model 600B input. Set the Multiplier and Range Switches to the settings given in Table 8. Use a stop watch or a Tektronix Model 561A Oscilloscope to time the rise to full peak deflection. Check each setting to ±5%.

TABLE 8.
Charge Ranges Accuracy Check. The Table gives the Multiplier Switch setting, the Coulomb Range Switch setting and the rise time for each coulomb range.

Multiplier Switch Setting	Range Switch Setting, COULOMBS	Rise Time, Zero to Full Scale (seconds)
.01	10^{-7}	10
.1	10^{-8}	10
1	10^{-9}	10
10	10^{-10}	10

5-12. FREQUENCY RESPONSE CHECK.

a. Zero check the unit. Connect a Wavetek Mode[illegible] 102 Function Generator through a 100:1 divider to [illegible] Model 600B input and connect the Electrometer output to a Hewlett-Packard Model 400 AC VTVM. Set the Electrometer FEEDBACK Switch to NORMAL.

NOTE

If other than a constant amplitude signal generator (Wavetek) is used, it will be necessary to monitor the output of the signal generator with another VTVM in order to maintain the same signal level at various frequencies specified.

b. Zero the Model 600B on the 10 millivolt range.

1. Set the Signal Generator to 20 Hz at minimum output. Release the Electrometer ZERO CHECK Button and increase the Generator output to obtain 0.7 volt rms at the Model 600B output.

2. Set the Generator to 1 kHz. The Electrometer output voltage must be within ±3 dB of the 20 Hz 0.7 volt rms output.

c. Zero the Model 600B on the 3-volt range and change the divider to 10:1.

1. Set the Generator to 100 Hz for minimum output. Release the Electrometer ZERO CHECK Button and increase the Generator output to obtain .07 volt rms at the Model 600B output.

2. Set the Generator to 20 kHz. The Electrometer output must be within ±3 dB of the 100 Hz .07 volt rms output.

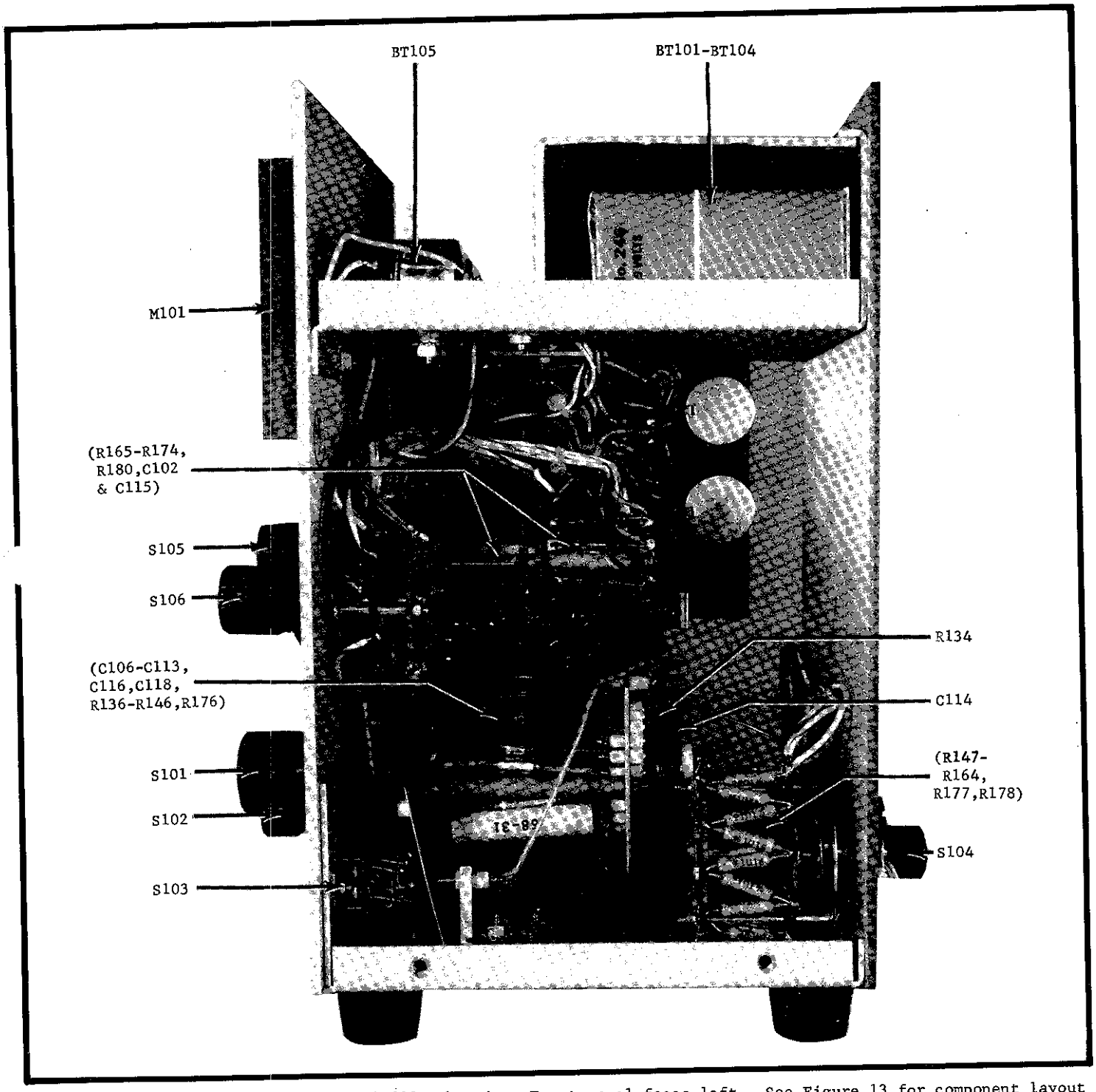

FIGURE 12. Component Layout of Model 600B Chassis. Front panel faces left. See Figure 13 for component layout of PC-189.

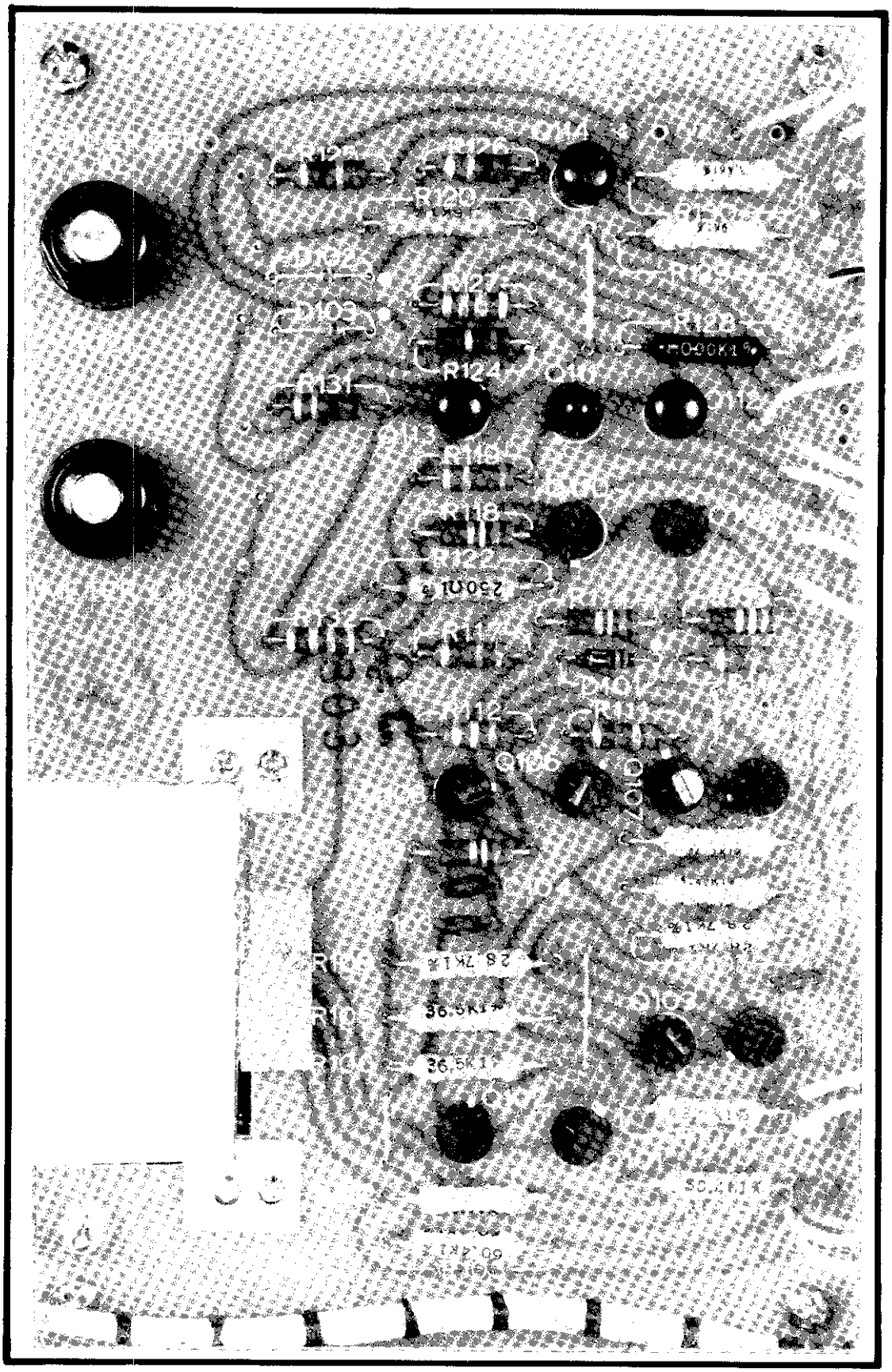

FIGURE 13. Component Layout for PC-189. For other Model 600B Components, see Figure 12.

SECTION 6. ACCESSORIES

6-1. MODEL 6101A SHIELDED TEST LEAD. (Figure 14). The Model 6101A is a probe and shielded lead to make measurements with the Model 600B more convenient and it ensures better connections. The Lead is furnished with 30 inches of low noise cable, terminated by a UHF type plug.

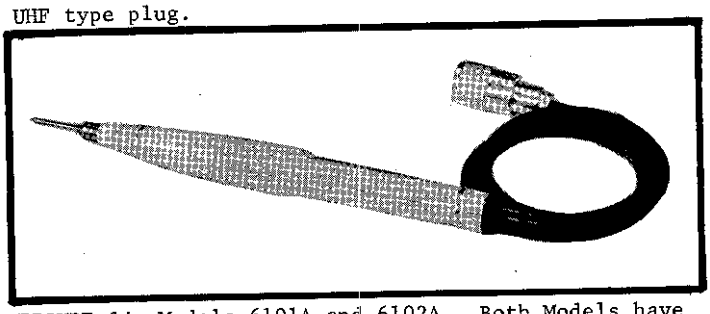

FIGURE 14. Models 6101A and 6102A. Both Models have identical external appearance.

6-2. MODEL 6101B GRIPPING PROBE (Figure 15). The Model 6101B is a gripping probe to permit fast, easy measurements. It is furnished with a 30-inch cable that is terminated with a UHF plug.

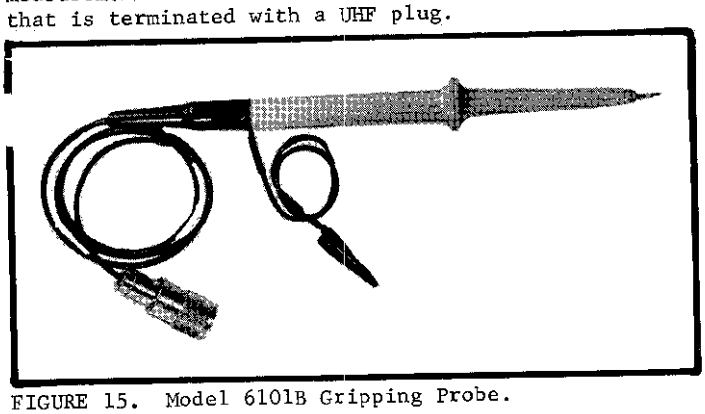

FIGURE 15. Model 6101B Gripping Probe.

6-3. MODEL 6102A VOLTAGE DIVIDER PROBE (Figure 14). The Model 6102A is a 10:1 voltage divider with an input resistance of 10^{10} ohms. It can be used with the Model 600B up to 100 volts with an accuracy of 4%. The Probe is furnished with 30 inches of low-noise coaxial cable, terminated with a UHF plug. Instructions for using the Probe with the Electrometer are in paragraph 2-3.

6-4. MODEL 6103A VOLTAGE DIVIDER PROBE (Figure 16). The Model 6103A is a 1000:1 voltage divider with an input resistance of 10^{12} ohms. It can be used with the Model 600B up to 10 kilovolts with an accuracy of ±7%. The Probe is furnished with 30 inches of low noise coaxial cable, terminated with a UHF plug. Instructions for using the Probe with the Electrometer are in paragraph 2-3.

6-5. MODEL 6104 TEST SHIELD.

a. The Model 6104 facilitates resistance measurements with either 2-terminal or 3-terminal guarded

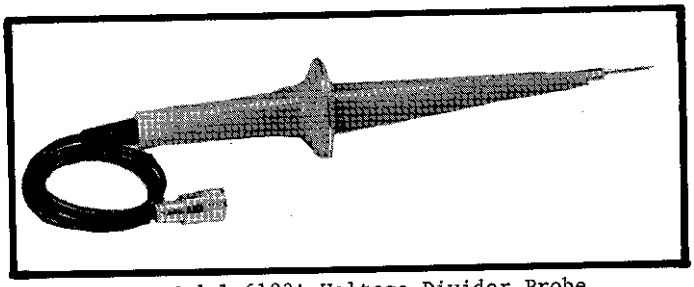

FIGURE 16. Model 6103A Voltage Divider Probe.

connections, as well as voltage and current tests.

b. 2-Terminal Operation.

1. Connect the high impedance side of the test sample to the Model 6104 INPUT Terminal. Connect the low impedance side to either black jack marked GROUND, whichever is more convenient.

2. Lock the enclosure and connect the Model 6104 BNC receptacle to the Model 600B INPUT Receptacle. Use a short coaxial cable. Operate the Model 600B as described in Section 2.

c. 3-Terminal Guarded Operation.

1. For guarded measurements, make the connections as above with this additional step.

2. Connect the Model 6104 black external plug to the Model 600B OHMS GUARD Terminal.

d. Operation with External Source.

1. Make connections as in subparagraph b above. Connect either Terminal marked EXTERNAL SOURCE to the test sample at its high impedance side. Lock the enclosure and connect the Model 6104 to the Electrometer.

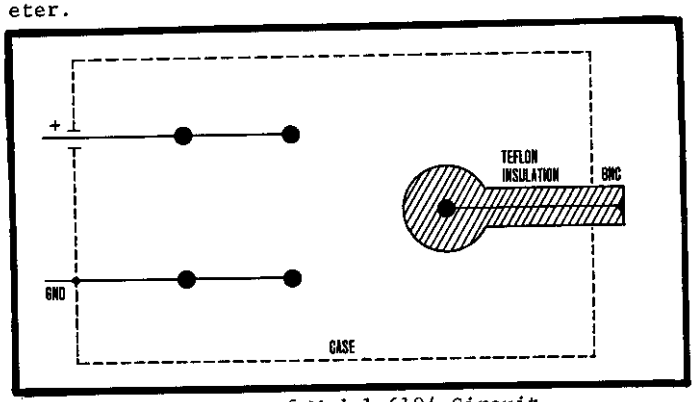

FIGURE 17. Diagram of Model 6104 Circuit.

2. Connect external voltage supply to banana plugs on the side of Model 6104, positive to red and negative to black. Set external source (such as Keithley Model 240A Voltage Supply) to desired voltage. Operate Electrometer as explained in Section 2.

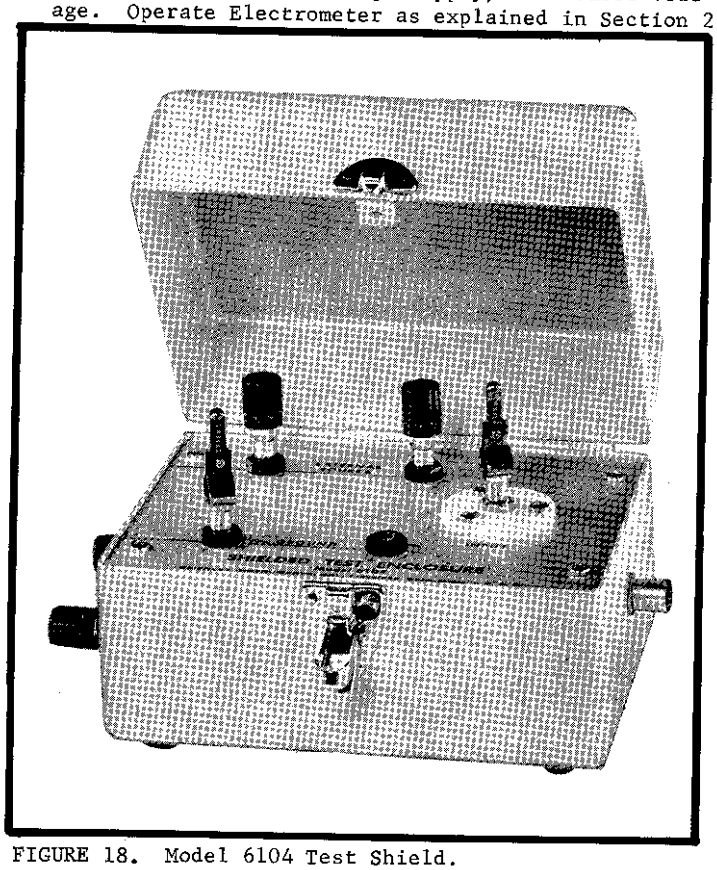

FIGURE 18. Model 6104 Test Shield.

6-6. MODEL 6105 RESISTIVITY ADAPTER.

a. Model 6105 is a guarded test fixture for measuring resistivities of materials in conjunction with the Model 600B and the Model 240A Voltage Supply. This system measures volume resistivities up to 3×10^{19} ohm-cm and surface resistivities up to 10^{18} ohms, in accordance with the procedures of the American Society for Testing and Materials. The Model 6105 maintains good sample contact with uniform pressure. The Adapter holds samples up to 4 inches in diameter and .25 inch thick. Maximum excitation voltage is 1000 volts.

b. The Model 6105 Instruction Manual explains the operating procedures for the system, using the Model 240A and an Electrometer.

c. The Model 600B can also be used with the Model 6105 alone. Operate the Model as an ohmmeter with the FEEDBACK Switch in FAST position. Connect the OHMS GUARD Terminal on the rear panel to the center terminal of the UHF POWER Receptacle of the Model 6105. Other operating procedures are as for the 3-instrument system. The current from the Model 600B is the reciprocal of the OHMS setting of the Range Switch; the voltage is the Multiplier Switch setting times the percentage of full scale that the meter reads.

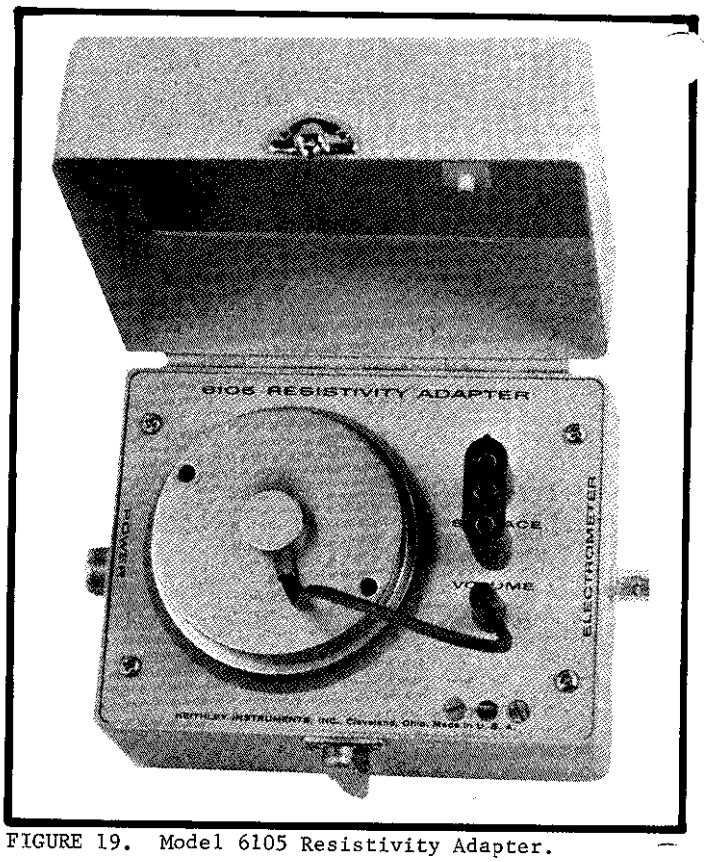

FIGURE 19. Model 6105 Resistivity Adapter.

6-7. MODELS 2501 AND 2503 STATIC DETECTOR PROBES.

a. The Model 2501 is a 10,000:1 capacitive divider when used with the head 3/8 inch from the charged surface. Measurements are accurate within 10%. The Model 2501 consists of a 3-inch diameter head and 10 feet of cable.

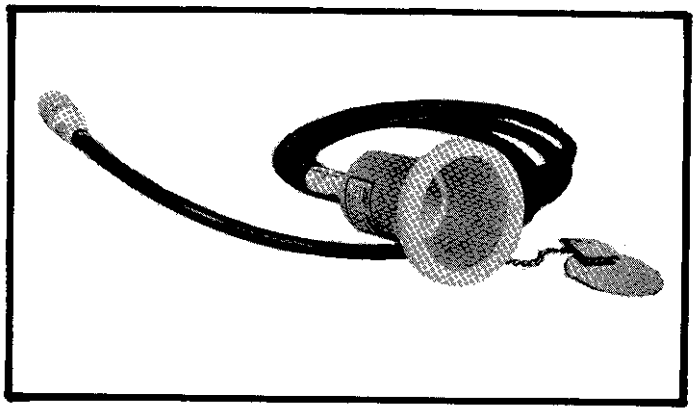

FIGURE 20. Model 2501 Static Detector Probe.

b. The Model 2503 (Figure 21) is similar to the Model 2501. However, its head is 1/2 inch in diameter and it connects directly to the Electrometer without any cable.

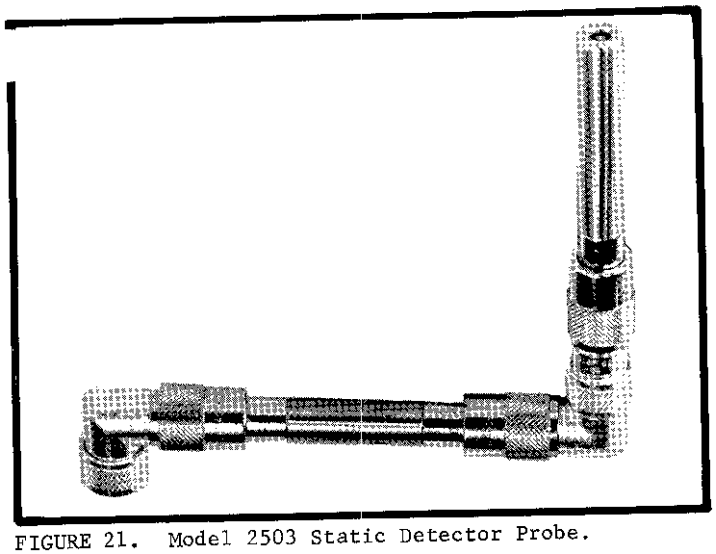

FIGURE 21. Model 2503 Static Detector Probe.

6-8. MODEL 6107 pH ELECTRODE ADAPTER. The Model 6107 is designed to allow accurate and convenient pH potential measurements with the Model 600B Electrometer. It accepts Leeds & Northup, Coleman and Beckman pH electrode connectors. The Adapter uses Teflon insulation and is fully guarded to insure that the accuracy of the Model 600B is affected in no way.

6-9. MODEL 370 RECORDER.

a. The Model 370 Recorder is uniquely compatible with the Model 600B as well as other Keithley electrometers, microvoltmeters and picoammeters. The Recorder is a high quality economical instrument that maximizes the performance of the Model 600B, and many other Keithley instruments, even in the most critical applications. The Model 370 can be used with the Model 600B to record voltage, resistance, current and charge over the Model 600B's entire range.

b. The Model 600B has the output necessary to drive the Recorder directly, thus eliminating the need for a pre-amplifier. The Recorder is specially shielded to avoid pickup of extraneous signals. The response time of the Model 370 Recorder is 0.5 seconds; linearity is ±1% of full scale. Ten chart speeds — from 3/4 inch per hour to 12 inches per minute — are selectable with front panel controls. The 6-inch chart has a rectilinear presentation. The Model 370 Recorder has a self-priming inking system. Chart paper and ink refills are easy to install.

c. The Model 370 is very easy to use with the Model 600B. Just connect the two units, set the Model 600B 1V-1MA Switch to 1 MA, set the Recorder to maximum sensitivity (completely clockwise) and adjust Model 600B 1 MA CAL Control for full-scale deflection. The furnished Model 3701 Input Cable mates directly with the output connector on Model 600B.

SECTION 7. REPLACEABLE PARTS

7-1. REPLACEABLE PARTS LIST. The Replaceable Parts List describes components of the Model 600B. The List gives the circuit designation, the part description, a suggested manufacturer, the manufacturer's part number and the Keithley Part Number. The last column indicates the figure picturing the part. The name and address of the manufacturers listed in the "Mfg. Code" column are in Table 10.

7-2. HOW TO ORDER PARTS.

a. For parts orders, include the instrument's model and serial number, the Keithley Part Number, the circuit designation and a description of the part. All structural parts and those parts coded for Keithley manufacture (80164) must be ordered through Keithley Instruments, Inc. or its representatives. In ordering a part not listed in the Replaceable Parts List, completely describe the part, its function and its location.

b. Order parts through your nearest Keithley representative or the Sales Service Department, Keithley Instruments, Inc.

TABLE 9. Abbreviations and Symbols

A	ampere	k	kilo (10^3)	p	pico (10^{-12})
CerD	Ceramic, disc	M	Mega (10^6)	Poly	Polystyrene
Comp	Composition	Mfg.	Manufacturer	Ref.	Reference
		Mil.No.	Military Type Number	req'd	required
DCb	Deposited Carbon	MtF	Metal Film		
F	farad	μ	micro (10^{-6})	V	volt
Fig.	Figure			W	watt
		No.	Number	WW	Wirewound
GCb	Glass enclosed carbon			WWVar	Wirewound Variable
		Ω	ohm		

MODEL 600B REPLACEABLE PARTS LIST
(Refer to Schematic Diagram 22808E for circuit Designations.)

BATTERIES

Circuit Desig.	Description	Mfg. Code	Mfg. Part No.	Keithley Part No.	Fig. Ref.
BT101	9 V zinc carbon battery	09823	2N6	BA-17	12
BT102	9 V zinc carbon battery	09823	2N6	BA-17	12
BT103	9 V zinc carbon battery	09823	2N6	BA-17	12
BT104	9 V zinc carbon battery	09823	2N6	BA-17	12
BT105	1.34 V sodium hydroxide battery	37942	PX-1	BA-24	12

CAPACITORS

Circuit Desig.	Value	Rating	Type	Mfg. Code	Mfg. Part No.	Keithley Part No.	Fig. Ref.
C102	390 pF	300 V	Mica	84171		C21-390P	12
C103	.0033 μF	600 V	CerD	72982	ED-.0033	C22-.0033M	13
C104	0.1 μF	600 V	CerD	72982	ED-.1	C22-.1M	13
C105	.01 μF	600 V	CerD	72982	ED-.01	C22-.01M	
C106	22 pF	500 V	Poly	71590	CPR-22J	C138-22P	12
C107	47 pF	500 V	Poly	71590	CPR-47J	C138-47P	12
C108	100 pF	160 V	Poly	84171	2PJ-101G	C108-100P	12
C109	.001 μF	160 V	Poly	84171	2PJ-102G	C108-.001M	12
C110	.1 μF	160 V	Poly	84171	2PJ-104G	C108-.1M	12

CAPACITORS (Cont'd.)

Circuit Desig.	Value	Rating	Type	Mfg. Code	Mfg. Part No.	Keithley Part No.	Fig. Ref.
C111	.01 µF	160 V	Poly	84171	2PJ-103G	C108-.01M	12
C112	.001 µF	160 V	Poly	84171	2PJ-102G	C108-.001M	12
C113	100 pF	160 V	Poly	84171	2PJ-101G	C108-100P	12
C114	150 µF	600 V	CerD	72982	ED-150	C22-150M	12
C115	.0027 µF	600 V	CerD	72982	ED-.0027	C22-.0027M	12
C116	10 pF	500 V	Poly	71590	CPR-10J	C138-10P	12
C118	5 pF	200 V	Poly	83125	E1013-1	C31-5P	12

CONNECTORS

Circuit Desig.	Description	Mfg. Code	Mfg. Part No.	Keithley Part No.	Fig. Ref.
J101	Printed Circuit Contacts	91662	02-005-111-5-200	CS-200	-
P101	Printed Circuit Contacts, mate of J102	91662	02-005-113-6-200	CS-199	-
J102	Receptacle, UHF, Input (Mil.No. 50239A)	91737	6804	CS-64	2
---	Plug, UHF, mate of J102 (Mil.No. 49190)	91737	5127	CS-49	-
---	Dust Cap (Mil.No. MX913/U)	91737	7901	CAP-4	-
J103	Binding Post, Ground	08811	33-286	BP-15	2
J104	Connector, Barrier Strip	71785	5-140-Y	TE-70	3
---	Binding Post, shorting, use with J104	71785	140J-1	BP-17	-

DIODES

Circuit Desig.	Type	Number	Mfg. Code	Keithley Part No.	Fig. Ref.
D101	Silicon	1N645	01295	RF-14	13
D102	Silicon	1N914	01295	RF-28	13
D103	Silicon	1N914	01295	RF-28	13
D104	Silicon	2N3565	07263	TG-39	13

MISCELLANEOUS

Circuit Desig.	Description	Mfg. Code	Keithley Part No.	Fig. Ref.
21850B	MOS FET Input Plug-in Card	80164	21850B	
M101	Meter	80164	ME-83A	12
---	Battery Holder for BT105 (Mfg. No. 2101)	94139	BH-15	-
---	Battery Holder, 4 req'd. (Mfg. No. 5D)	71785	BH-6	-
---	Top Cover Assembly, including handle	80164	22553B	-
---	Top Cover without handle	80164	22307C	-
---	Handle strap (Mfg. No. 935)	80164	HH-11	-
---	Post Loop for handle strap, 2 req'd. (Mfg. No. 0253)	80164	HH-10	-
---	Foot, black plastic, 4 req'd.	80164	FE-5	-
---	Rubber ball foot insert, 4 req'd.	80164	FE-6	-

RESISTORS

Circuit Desig.	Value	Rating	Type	Mfg. Code	Mfg. Part No.	Keithley Part No.	Fig. Ref.
R100	115 kΩ	1%, 1/2 W	MtF	07716	CEC	R94-115K	13
R101	49.9 kΩ	1%, 1/2 W	MtF	07716	CEC	R94-49.9K	13
R102	115 kΩ	1%, 1/2 W	MtF	07716	CEC	R94-115K	13
R103	49.9 kΩ	1%, 1/2 W	MtF	07716	CEC	R94-49.9K	13
R104	43.2 kΩ	1%, 1/2 W	MtF	07716	CEC	R94-43.2K	13
R105	36.5 kΩ	1%, 1/2 W	MtF	07716	CEC	R94-36.5K	13
R106	36.5 kΩ	1%, 1/2 W	MtF	07716	CEC	R94-36.5K	13
R107	28.7 kΩ	1%, 1/2 W	MtF	07716	CEC	R94-28.7K	13
R108	40.2 kΩ	1%, 1/2 W	MtF	07716	CEC	R94-40.2K	13
R109	4.42 kΩ	1%, 1/2 W	MtF	07716	CEC	R94-4.42K	13
R110	24.3 kΩ	1%, 1/2 W	MtF	07716	CEC	R94-24.3K	13
R111	1 kΩ	10%, 1/2 W	Comp	01121	EB	R1-1K	13
R112	270 kΩ	10%, 1/2 W	Comp	01121	EB	R1-270K	13
R113	180 kΩ	10%, 1/2 W	Comp	01121	EB	R1-180K	13
R114	180 kΩ	10%, 1/2 W	Comp	01121	EB	R1-180K	13
R115	180 kΩ	10%, 1/2 W	Comp	01121	EB	R1-180K	13
R116	6.8 kΩ	10%, 1/2 W	Comp	01121	EB	R1-6.8K	13
R117	6.8 kΩ	10%, 1/2 W	Comp	01121	EB	R1-6.8K	13
R118	180 kΩ	10%, 1/2 W	Comp	01121	EB	R1-180K	13
R119	82 kΩ	10%, 1/2 W	Comp	01121	EB	R1-82K	13
R120	8.06 kΩ	1%, 1/2 W	MtF	07716	CEC	R94-8.06K	13
R121	15 kΩ	10%, 5 W	WWVar	71450	AW	RP3-15K	13
R122	250 Ω	1%, 1/2 W	DCb	91637	DCF-1/2	R12-250	13
R123	2 kΩ	10%, 5 W	WWVar	71450	AW	RP34-2K	13
R124	56 Ω	10%, 1/2 W	Comp	01121	EB	R1-56	13
R125	56 Ω	10%, 1/2 W	Comp	01121	EB	R1-56	13
R126	10 kΩ	10%, 1/2 W	Comp	01121	EB	R1-10K	13
R127	47 kΩ	10%, 1/2 W	Comp	01121	EB	R1-47K	13
R128	1 kΩ	1%, 1/2 W	MtF	07716	CEC	R94-1K	13
R129	9 kΩ	1%, 1/2 W	MtF	07716	CEC	R94-9K	13
R130	3.4 kΩ	1%, 1/2 W	MtF	07716	CEC	R94-3.4K	13
R131	10 kΩ	10%, 1/2 W	Comp	01121	EB	R1-10K	13
R132	47 kΩ	10%, 1/2 W	Comp	01121	EB	R1-47K	13
R133	10 kΩ	10%, 5 W	WWVar	71450	AW	RP3-10K	2
R134	10 MΩ	10%, 1/2 W	Comp	01121	EB	R1-10M	12
R135	**100 kΩ	10%, 1/2 W	Comp	01121	CB	R76-100K	-
R136	10 Ω	1%, 10 W	WW	91637	RS-10	R34-10	12
R137	100 Ω	1%, 10 W	WW	91637	RS-10	R34-100	12
R138	1 kΩ	10%, 1/2 W	DCb	91637	DCF-1/2	R12-1K	12
R139	10 kΩ	10%, 1/2 W	DCb	91637	DCF-1/2	R12-10K	12
R140	100 kΩ	10%, 1/2 W	DCb	91637	DCF-1/2	R12-100K	12
R141	1 MΩ	10%, 1/2 W	DCb	91637	DCF-1/2	R12-1M	12
R142	10 MΩ	10%, 1/2 W	DCb	91637	DCF-1/2	R12-10M	12
R143	100 MΩ	1%, 2 W	DCb	91637	DC-2	R14-100M	12
R144	10^9 Ω	+3-0%, 1/R W	GCb	63060	RX-1	R20-10^9	12
R145	10^{10} Ω	+3-0%, 1/R W	GCb	63060	RX-1	R20-10^{10}	12
R146	10^{11} Ω	+3-0%, 1/R W	GCb	63060	RX-1	R20-10^{11}	12
R147	91 Ω	1%, 1/2 W	MtF	07716	CEC	R94-91	12
R148	91 Ω	1%, 1/2 W	MtF	07716	CEC	R94-91	12
R149	91 Ω	1%, 1/2 W	MtF	07716	CEC	R94-91	12
R150	91 Ω	1%, 1/2 W	MtF	07716	CEC	R94-91	12
R151	91 Ω	1%, 1/2 W	MtF	07716	CEC	R94-91	12
R152	91 Ω	1%, 1/2 W	MtF	07716	CEC	R94-91	12
R153	91 Ω	1%, 1/2 W	MtF	07716	CEC	R94-91	12

** Part of Input Plug-in Board. Order only from Keithley, part number 21850B.

RESISTORS (Cont'd)

Circuit Desig.	Value	Rating	Type	Mfg. Code	Mfg. Part No.	Keithley Part No.	Fig. Ref.
R154	91 Ω	1%, 1/2 W	MtF	07716	CEC	R94-91	12
R155	91 Ω	1%, 1/2 W	MtF	07716	CEC	R94-91	12
R156	91 Ω	1%, 1/2 W	MtF	07716	CEC	R94-91	12
R157	91 Ω	1%, 1/2 W	MtF	07716	CEC	R94-91	12
R158	91 Ω	1%, 1/2 W	MtF	07716	CEC	R94-91	12
R159	91 Ω	1%, 1/2 W	MtF	07716	CEC	R94-91	12
R160	91 Ω	1%, 1/2 W	MtF	07716	CEC	R94-91	12
R161	91 Ω	1%, 1/2 W	MtF	07716	CEC	R94-91	12
R162	91 Ω	1%, 1/2 W	MtF	07716	CEC	R94-91	12
R163	91 Ω	1%, 1/2 W	MtF	07716	CEC	R94-91	12
R164	91 Ω	1%, 1/2 W	MtF	07716	CEC	R94-91	12
R165	20 kΩ	1%, 1/2 W	DCb	91637	DCF-1/2	R12-20K	12
R166	1.5 kΩ	1%, 1/2 W	DCb	91637	DCF-1/2	R12-1.5K	12
R167	10 Ω	10%, 1/2 W	Comp	01121	CB	R76-10	12
R168	9.1 k	0.5%, 1/2 W	MtF	07716	CEC	R61-9.1K	12
R169	2.73 kΩ	0.5%, 1/2 W	MtF	07716	CEC	R61-2.73K	12
R170	910 Ω	0.5%, 1/2 W	MtF	07716	CEC	R61-910	12
R171	273 Ω	0.5%, 1/2 W	MtF	07716	CEC	R61-273	12
R172	91 Ω	0.5%, 1/2 W	MtF	07716	CEC	R61-91	12
R173	27.3 Ω	0.5%, 1/2 W	MtF	07716	CEC	R61-27.3	12
R174	9.1 Ω	0.5%, 1/4 W	WW	01686	T-2A	R123-9.1	12
R175	Not used.						
R176	134 kΩ	1%, 1/2 W	DCb	91637	DCF-1/2	R12-134K	12
R177	979 Ω	0.5%, 1/2 W	MtF	07716	CEC	R61-979	12
R178	8.6 kΩ	10%, 1/2 W	DCb	91637	DCF-1/2	R12-8.6K	12
R179	20 kΩ	10%, 5W	WWVar	71450	AW	RP34-20K	3
R180	20 kΩ	10%, 1/2 W	DCb	91637	DCF-1/2	R12-20K	12
R181	6.8 kΩ	10%, 1/2 W	Comp	01121	EB	R1-6.8K	
R182	6.8 kΩ	10%, 1/2 W	Comp	01121	EB	R1-6.8K	

SWITCHES AND CONTROLS

Circuit Desig.	Description	Mfg. Code	Keithley Part No.	Fig. Ref.
S101	Rotary Switch less components, Range	80164	SW-257	2,12
---	Rotary Switch with components, Range	80164	22425B	
---	Dial Assembly, Range Switch	80164	17033A	
S102	Push Button, ZERO CHECK	80164	18446A	2,12
---	Knob Assembly, Zero Check Button	80164	14376A	
S103	Slide Switch, FEEDBACK	80164	SW-45	2,12
S104	Rotary Switch less Components, COARSE ZERO	80164	SW-281	3,12
---	Rotary Switch with Components, Coarse Zero	80164	22495B	
---	Knob, Coarse Zero Switch	80164	16373A	
S105	Rotary Switch less components, Multiplier	80164	SW-252	2,12
---	Rotary Switch with components, Multiplier	80164	22485B	
---	Knob Assembly, Multiplier Switch	80164	15384A	
S106	Rotary Switch, METER	80164	SW-320	2,12
---	Knob Assembly, Meter Switch	80164	18393A	
---	Zero Control Potentiometer (Mfg. No. AW)	71450	RP34-10K	2
---	Knob Assembly, Zero Control	80164	15110A	
---	1V-1MA CAL Control (Mfg. No. AW)	80164	RP34-20K	3

TRANSISTORS

Circuit Desig.	Number	Mfg. Code	Keithley Part No.	Fig. Ref.
Q101A	2N3903	04713	TG-49	13
Q101B	2N3903	04713	TG-49	13
Q103A	2N3903	04713	TG-49	13
Q103B	2N3903	04713	TG-49	13
Q105	2N3903	04713	TG-49	13
Q106	2N3903	04713	TG-49	13
Q107	2N3905	04713	TG-53	13
Q108	2N3905	04713	TG-53	13
Q109	2N3903	04713	TG-49	13
Q110	2N3905	04713	TG-53	13
Q111	**		21850B	13
Q112	S17638	07263	TG-33	13
Q113	S17638	07263	TG-33	13
Q114	S17638	07263	TG-33	13
Q115	**		21850B	13

**Resistor R135 and transistors Q111 and Q115 are part of Input Plug In board; Q111 and Q115 are matched transistors. Replace these components only by ordering Plug-in board, Keithley part Number 21850B.

TABLE 10.
Code List of Suggested Manufacturers (Based on Federal Supply Code for Manufacturers, Cataloging Handbook H4-1).

01121	Allen Bradley Corp. 1201 South 2nd St. Milwaukee, Wis. 53204
01295	Texas Instruments, Inc. Semiconductor-Components Division 13500 N. Central Expressway Dallas, Texas 75231
01686	RCL Electronics, Inc. 195 McGregor Street Manchester, N.H. 03102
04713	Motorola Semiconductor Products Inc. 5005 East McDowell Rd. Phoenix, Arizona 85008
07263	Fairchild Camera & Instrument Corp. - Semiconductor Division - 313 Frontage Rd. Mountain View, Cal.
07716	IRC, Inc. 2850 Mt. Pleasant Burlington, Iowa 52601
08811	GL Electronics Div. of GL Industries, Inc. 300 Harvard Avenue Westville, N.J. 08093
09823	Burgess Battery Co. Division of Servel, Inc. Foot of Exchange St. Freeport, Ill.
37942	Mallory, P.R. & Co, Inc. 3029 E. Washington St. Indianapolis, Ind. 46206
63060	Victoreen Instrument Co. 5806 Hough Ave. Cleveland, Ohio 44103
71450	CTS Corp. 1142 W. Beardsley Ave. Elkhart, Ind.
71590	Centralab Division of Globe-Union, Inc. 932 E. Keefe Avenue Milwaukee, Wis. 53212
71785	Cinch Mfg. Co. and Howard B. Jones Div. 1026 S. Homan Avenue Chicago, Ill. 60624
72982	Erie Technological Products, Inc. 644 W. 12th Street Erie, Pa. 16512
80164	Keithley Instruments, Inc. 28775 Aurora Road Cleveland, Ohio 44139
83125	General Instrument Corp. Capacitor Division Orange Street Darlington, S.C. 29532
84171	Arco Electronics, Inc. Community Drive Great Neck, N.Y. 11022
91637	Dale Electronics, Inc. P.O. Box 609 Columbus, Nebraska 68601
91662	Elco Corp. Willow Grove, Pa.
91737	Gremar Mfg. Co., Inc. 7 North Avenue Wakefield, Mass.
94139	Keystone Electronics Co. 67-7th Avenue Newark, N.J. 07104

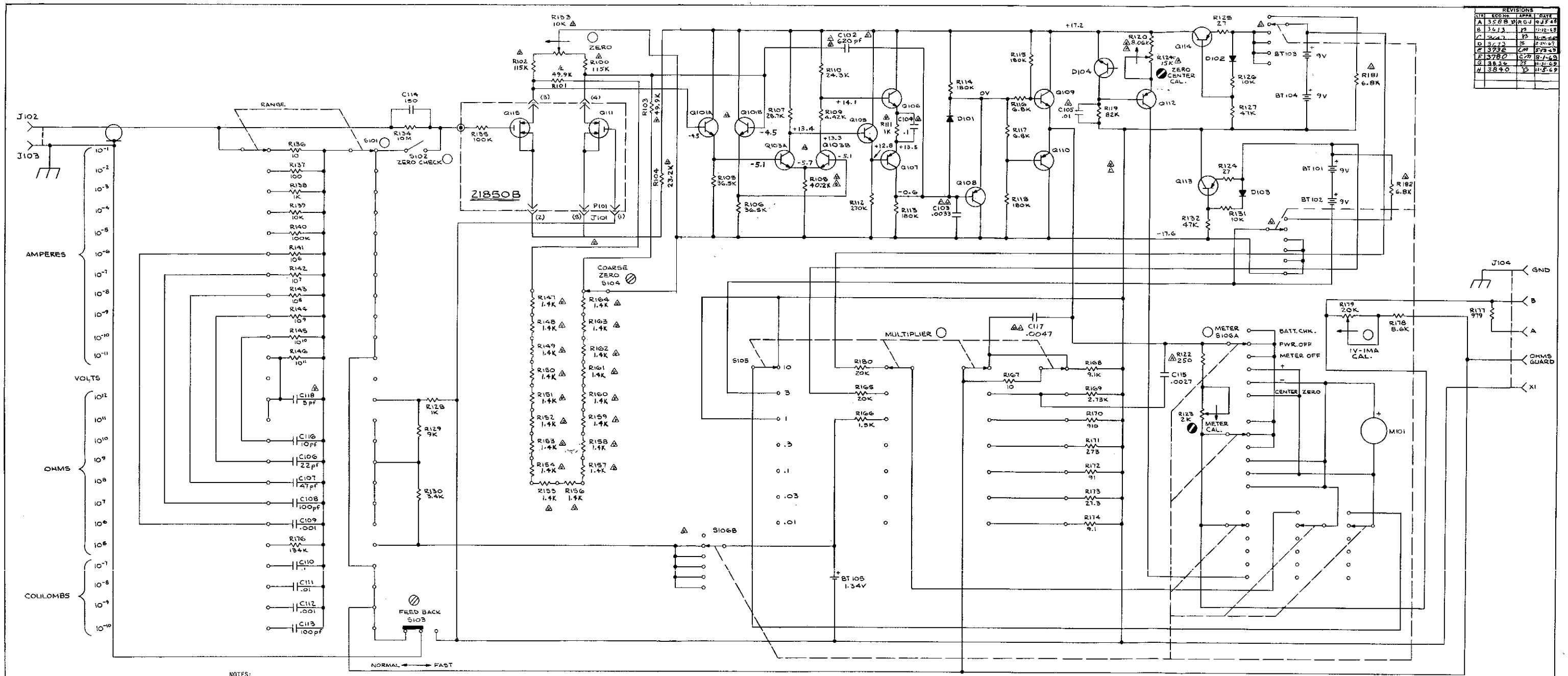

NOTES:

1. ALL RESISTANCE & CAPACITANCE SHALL BE DESIGNATED IN OHMS & MICROFARADS UNLESS OTHERWISE NOTED.
2. ○ FRONT PANEL CONTROL.
3. ◐ INTERNAL SCREWDRIVER ADJ.
4. ⊘ REAR PANEL CONTROL.
5. M MEGOHM
6. K 1000 OHM
7. pf PICOFARAD
8. ✳ INDICATES NOMINAL VALUE DETERMINED DURING FINAL CALIBRATION.
9. ↑ CLOCKWISE ROTATION.
10. ALL VOLTAGES MEASURED REFERRED TO CHASSIS GROUND, WITH S103 IN NORMAL.

HIGHEST SCHEMATIC DESIGNATIONS				
M101	BT105	D104	R182	C118
Q115	S106B	J104	P104	

SCHEMATIC DESIGNATIONS NOT USED		
Q102	Q104	C101

REVISIONS			
LTR	ECO NO	APPR	DATE
A	3588	RGJ	4-25-68
B	3613		11-12-68
C	3647		11-15-68
D	3673		2-24-69
E	3732	CM	5-13-69
F	3780	CM	8-1-69
G	3836		10-31-69
H	3840		11-5-69

600B		
MODEL	NEXT ASSEMBLY	QUAN
USED ON		

DIMENSIONAL TOLERANCES UNLESS OTHERWISE SPECIFIED

FRAC	DEC	ANG
± 1/64	± .005	± 1°

DO NOT SCALE

DRN D.D.L. DATE 6-15-68
CKD. DATE 8-1-68
ENG. APPR. DATE 9/1/68
PILOT RELEASE DATE
PROD. RELEASE DATE

KEITHLEY INSTRUMENTS CLEVELAND, OHIO

MATERIAL
FINISH

TITLE SCHEMATIC ELECTROMETER

PART NUMBER 22808E

CALIBRATIONS AVAILABLE AT KEITHLEY INSTRUMENTS.

Listed and defined below are the four types of calibrations and their associated report formats which are presently available at Keithley Instruments. They fall into the following categories:

1. Report of Calibration Certified Traceable to the National Bureau of Standards
2. Calibration Report
3. Certificate of Compliance
4. Recalibration

All calibration and certification performed by Keithley Instruments is in accord with MIL-C-45662A.

Prices shown below are in addition to repair charges for any work necessary to place a customer's unit into first class condition prior to the calibration.

1. Report of Calibration Certified Traceable to the National Bureau of Standards.

This is a completely documented report, including all basic errors or deviations from nominal settings on appropriate ranges, terminals, dials, etc. Work is performed using the primary standards of the company with secondary transfers kept to a minimum. The NBS test numbers for the latest recalibration of the primary standards are furnished.

By definition, the above is performed in our Standards Laboratory so that random operator induced error is minimized and maximum protection to the equipment used is maintained.

This type of calibration is not recommended for instruments with a basic inaccuracy of 1% or greater. The precision involved in this report makes it uneconomical for such instruments. The Calibration Report listed below (No. 2) would be better suited in this case.

As of 11/1/69 the Report of Calibration Certified Traceable to the National Bureau of Standards is available on the following instruments at the prices listed:

Model 140	$275	Model 5155 (Complete Set)	$295
Model 260	$225	Model 5155-10^8	$ 50
Model 261	$375	Model 5155-10^9	$ 50
Model 515	$375	Model 5155-10^{10}	$ 50
Model 630	$275	Model 5155-10^{11}	$ 60
Model 660A	$250	Model 5155-10^{12}	$ 60
Model 662	$275	Model 5155-10^{13}	$ 80

2. Calibration Report.

This report shows only the cardinal range, terminal, dial, etc. errors as determined by production calibration equipment and personnel. The production equipment is maintained traceable by transfer techniques against the primary standards maintained by the company. We attest to this fact and list basic deviations from nominal but the conditions of calibration are not as precisely controlled as the previous report nor are NBS test numbers supplied.

This report is available for any instrument in our line. As of November 1, 1969, only the following price has been established for this report:

Model 261 . . . . . $ 55

Prices for other units can be estimated upon request.

3. Certificate of Compliance.

This is merely a restatement of the basic guarantee that the instrument was calibrated on equipment that is maintained by our standards personnel against primary standards. No report is issued.

This Certificate of Compliance is available at no charge for any instrument with the exception of the Model 261.

A newly purchased Model 261 or one returned for repair or recalibration is automatically supplied with a Calibration Report (as described in (2) above). The nature of this instrument makes it necessary to complete this report to ascertain specified accuracy. This Calibration Report is forwarded to the customer with the instrument. The $55 charge is incorporated as part of the normal calibration charge of the Model 261.

4. Recalibration.

This is a recalibration of the instrument according to our factory calibration procedures. The prices for this as of November 1, 1969 are as follows:

Model 260 . . . . . $ 85 (No report supplied. A Certificate of Compliance can be had at no charge if requested).

Model 261 . . . . . $ 55 (Calibration Report as described in (2) above is supplied. See (3) for explanation).

All other instruments are on a time and material basis for the particular unit involved.

REPAIR AND CALIBRATION FORM

For repair or calibration, please fill out this form and return it with your instrument to:
Sales Service Department
Keithley Instruments, Inc.
28775 Aurora Road
Cleveland, Ohio 44139

R- _____
Do not write in this space.

User's Name _____ Telephone _____ Ext. _____
Company _____ Address _____
Division _____ City _____ State _____ Zip _____
Date _____ Model No. _____ Serial No. _____

1. Reason for Return
   - ☐ Repair and Recalibration
   - ☐ Recalibration only (No report, except as specified in item 4 on reverse)*

   *If repairs are necessary to meet specifications, they will be in addition to the calibration.

2. Calibration Report Desired
   - ☐ Report of Calibration Certified Traceable to N.B.S.
   - ☐ Calibration Report
   - ☐ Certificate of Compliance
   - ☐ None

   (for details, see reverse side of this form)

3. To help repair the instrument, briefly describe the problem: _____

4. Is the problem ☐ Constant ☐ Intermittant
   Under what conditions does the problem occur:
   a) Control setting _____
   b) Approx. Temperature _____ °F
   c) Approx. Temperature variation ± _____ °F
   d) Approx. Humidity (high, medium, low) _____
   e) Line voltage _____
   f) Other (such as line transients, line variations, etc.) _____

5. Please draw a block diagram of the system using the Keithley. List any other pertinent data which can help in the repair. Include charts or other data if available.
   Signal Source _____
   Source Impedance _____
   Readout Device:
   - ☐ Recorder
   - ☐ Oscilloscope
   - ☐ Other
   - ☐ None

   Lengths & Types of Connecting Cables _____

6. What repairs or modifications have been made on this instrument which are not on file with the Keithley Repair Department? _____

7. Please enclose any other pertinent data and charts which you feel might help the Repair and Calibration Department

_____ Signature _____ Title

1267

KEITHLEY INSTRUMENTS, INC.

28775 AURORA ROAD • CLEVELAND, OHIO 44139 • (216) 248-0400
TELEX: 98-5469 • CABLE: KEITHLEY